PHILIPS

Exploded View

Latte Go Series

2200,3200,3500

General information

Warning: Please note we have 2 different production locations and parts are not interchangeable. Please make sure you select the correct matching parts from the BOMs

Machines produced in Romania (Serial TW)

To choose the correct exploded view please check the label in the lateral door of the coffee machine.
Please click on label no:1

- If the machine is made in Romania
- If the serial number starts with TW...

Click on the picture

Please click on label no:2

- If the machine is made in China
- If the serial number starts with TJ...

Click on the picture

Index

Click on every chapter of the index to go to the right page on the exploded view

Machines produced in Romania (Serial TW...)

Housing Parts	4-5
Front parts (UI)	6
Water circuit	7-8
Grinder	9
Mounting plate	10
Brew unit	11-12
Wiring diagram	13

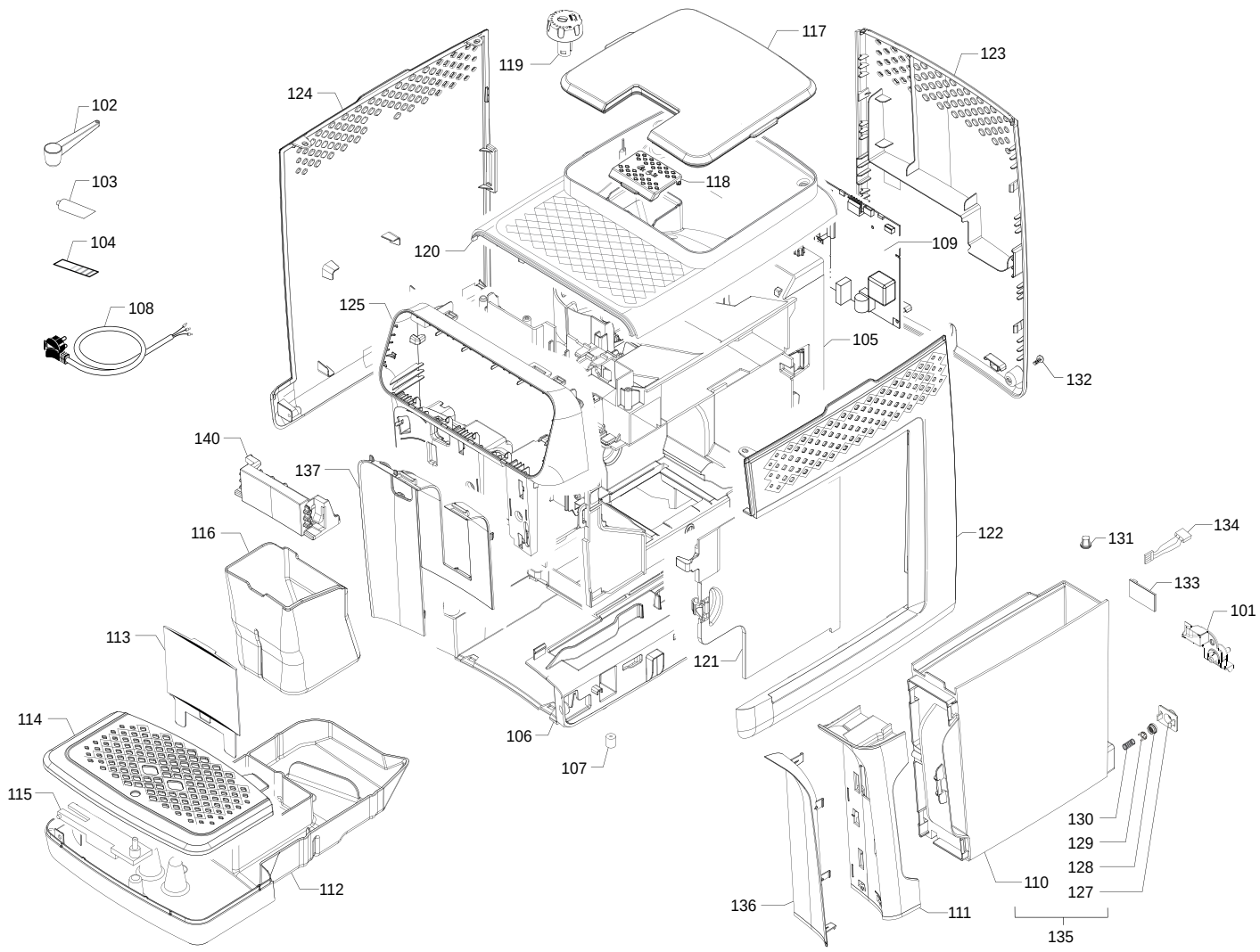

EP2035/40 EP2235/40 EP3242/60 EP2030/10
EP2131/62 EP3146/72/82/92 EP3243/50/70

EP2136/62/72 EP3241/50/54/74 EP3246/84

EP2230/10/12/13/14/15 EP3246/70/72/73/74

EP2231/40/42/43/44 EP3249/70 EP3546/70

Cod. 882870040830 882872440020-0400 882873660400 882870210830
Cod. 882873062710-2210 882873372710-82710-92710-92210 882872050020-400-70020-70400-70830

Cod. 882873162710- 2210-882873172210 882871650020-0400-0830-4820-74520 82872050010- 0300-882872070010

Cod. 882871310010-0300-2240-3470-4820-5240 882871770620-0220-0400-3470-0830-0020-4820-4860

Cod. 882871440020-0620-2410-0400-0830-3470-4860-0530 882872170020-0400 882871784660 882874170010

POS	12NC	DESCRIPTION	NOTE
101	421945006761	WATER TANK CONNECTOR V2 OMN	⚠
	421945003211	WATER LEVEL SENSOR COVER OMN	only for EP2030/10
102	421944086411	COFFEE SPOON OMN	
103	421945031791	KLUBERLUB NH1 11-222 TUBE 5GR. V2	
104	421940402711	STICKER FOR WATER HARDNESS TEST	
105	421944085661	CENTRAL STRUCTURE OMN ASSY	
	421945004741	CENTRAL STRUCTURE OMN UL ASSY	120-127V
		only for EP3546/70 - EP3241/74	
	421945016861	CENTRAL STRUCTURE ASSY STLR	
		only for EP3242/60 - EP3146/72/82/92 - EP3249/70 -	
		EP3243/50/70 - EP3241/50 - EP3246/70/72	
	421945015261	CENTRAL STRUCTURE OMP/B ASSY	only for EP2231/40
106	421944085671	BASE PLATE OMN ASSY	
	421944083071	BLK CASING BOTTOM OMN/B	
		only for EP2131/62 - EP2136/62 - EP2230/10/13	
		EP2231/40 - EP3146/82 - EP3241/50 - EP3246/70	
	421945015211	BLK CAS.BOTTOM V2 OMP/B 120V AS	
		only for EP2230/14/15 - EP2231/44 - EP3241/54/74 -	
		EP3246/74 - EP3246/84	
	421945014111	BASE PLATE OMN ASSY	
		only for EP3241/50 - EP3146/92 - EP2230/10 -	
		EP3246/70 - EP2231/40 - EP2230/12 - EP2231/40 -	
		EP2131/62 - EP2136/62/72 - EP3546/70	
107	421324705256	FOOT	
108	421946043171	BLK POWER CABLE 3X0.75 SCHUKO L=1000	
	421945002001	BLK POWER CABLE USA L=1000	⚠
	421945002011	BLK POWER CABLE TWN L=1000	⚠
	421945005041	BLK POWER CABLE 3X0.75 CN L=1000	⚠
	421945017322	BLK POWER CABLE 3X0,75MM BR 220V L=1000	⚠
	421945017341	BLK POWER CABLE 3X0,75MM AR L=1000	⚠
	421945022151	BLK POWER CABLE 3X0.75 SCH L=1000	⚠
	421945012171	BLK POWER CABLE 3X0,75MM TH L=1000	⚠
	421945017331	BLK POWER CABLE 3X1,5MM BR 127V L=1000	⚠
	421945003511	BLK POWER CABLE 3X0,75MM SING/UK L=1000	⚠
	421945005531	BLK POWER CABLE 3X0,75MM ANZ L=1000	⚠
109	421945007951	KIT MAINBOARD+SW OMN 230V	⚠
	421945000241	MAIN+SW TEST OMN LOW VOLT	⚠
	421945009902	MAIN+SW APP OMN KR V2	⚠ only for Korea
	421945042631	KIT MAIN+SW APP OMNW/B	only for EP3546/70
	421945055821	KIT MAIN+SW APP OMN/LVIC	only for EP3241/74
110	-	WATER TANK OMN	not available - see pos.135

POS	12NC	DESCRIPTION	NOTE
111	421944083011	WATER TANK HANDLE OMN/H-T	
	421944085351	WATER TANK HANDLE OMN/P-B	
		only for EP2230/12 - EP2230/14	
	421944091941	WHIS WATER TANK HANDLE OMN/T-H	
		only for EP3146/92 - EP3243/50/70 - EP3249/70	
	421945017501	CASH WATER TANK HANDLE OMP/H	EP3146/72 - EP3246/84
112	421944082861	BLK DRIP TRAY OMN/B	
113	421944082871	BLK DUMP BOX COVER OMN/H-T	
		only for EP2131-2231-3241-3243 - EP2136/72	
	421944085301	BLK DUMP BOX COVER OMN/B-P	only for EP2230/12/13/14
	421944094521	DUMP BOX COV.SIL.SPEC.OMN/T	
		only for EP3146/82 - EP3243/70 - EP3246/70/72/73 -	
		EP2136/62 - EP3546/70	
	421944094551	DUMP BOX COV.PANTERA OMN/T	EP3249
	421944092671	ZINK BROWN DUMP BOX COV.OMN/H-T	EP2035-2235
	421945015881	DUMP BOX COV.COPPER OMN/T	only for EP3146/72/92
114	421944083121	BA/SS GRATE FOR DRIP TRAY OMN/B	
	421944082851	BLK GRATE FOR DRIP TRAY OMN/B	only for EP2230/10/12/14/15
	421945023292	BA/SS GRATE FOR DRIP TRAY V3 OMN/B	
		only for EP2131/62 - EP2136/62 - EP2136/62/72	
		- EP2231/40/42/43/44 - EP2235/40 - EP3146/92 -	
		EP3546/70 - EP3241/74	
115	421944088751	FLOATER OMN/B	
116	421944082881	BLK DUMP BOX OMN/B	
117	421944082821	TR/GRY BEAN COF.CONT.LID W/SEAL OMN/B	
	421944091961	BEAN CONT.LID OMN V2	only for china
		only for EP2131/62 - EP2136/62/72 - EP3146/92	
118	421944084601	NAT/GRY GROUND COF.HOPPER LID OMN/B	
119	421944085401	GRINDER SETTING KNOB OMN	
120	421944082831	M/BLK UPPER CASING COVER OMN/B	
	421944091921	WHIS UPP.CAS.COVER OMN/B	only for EP3243-3249
	421945015271	M/BLK UPPER CASING COVER V2 OMN/B	
		only for EP2230/12/13/14/15 - EP2231/42/43/44	
		EP3241/54/74 - EP3242/60 - EP3246/72 - EP2230/12 -	
		EP2131/62 - EP2136/62/72 - EP3546/70	
	421945015301	CASH UPP.CAS.COVER V2 OMN/B	EP3146/72-EP3246/84
	421945015281	WHIS UPP.CAS.COVER V2 OMN/B	only for EP3146/92

IMPORTANT REPAIR INSTRUCTIONS: Only use genuine Philips spare parts to replace critical components.
The warranty of your Philips product is void if you do not use genuine Philips spare parts to repair critical components of your appliance.
The critical components are indicated with a warning triangle ⚠ in the service exploded view and/or service manual.

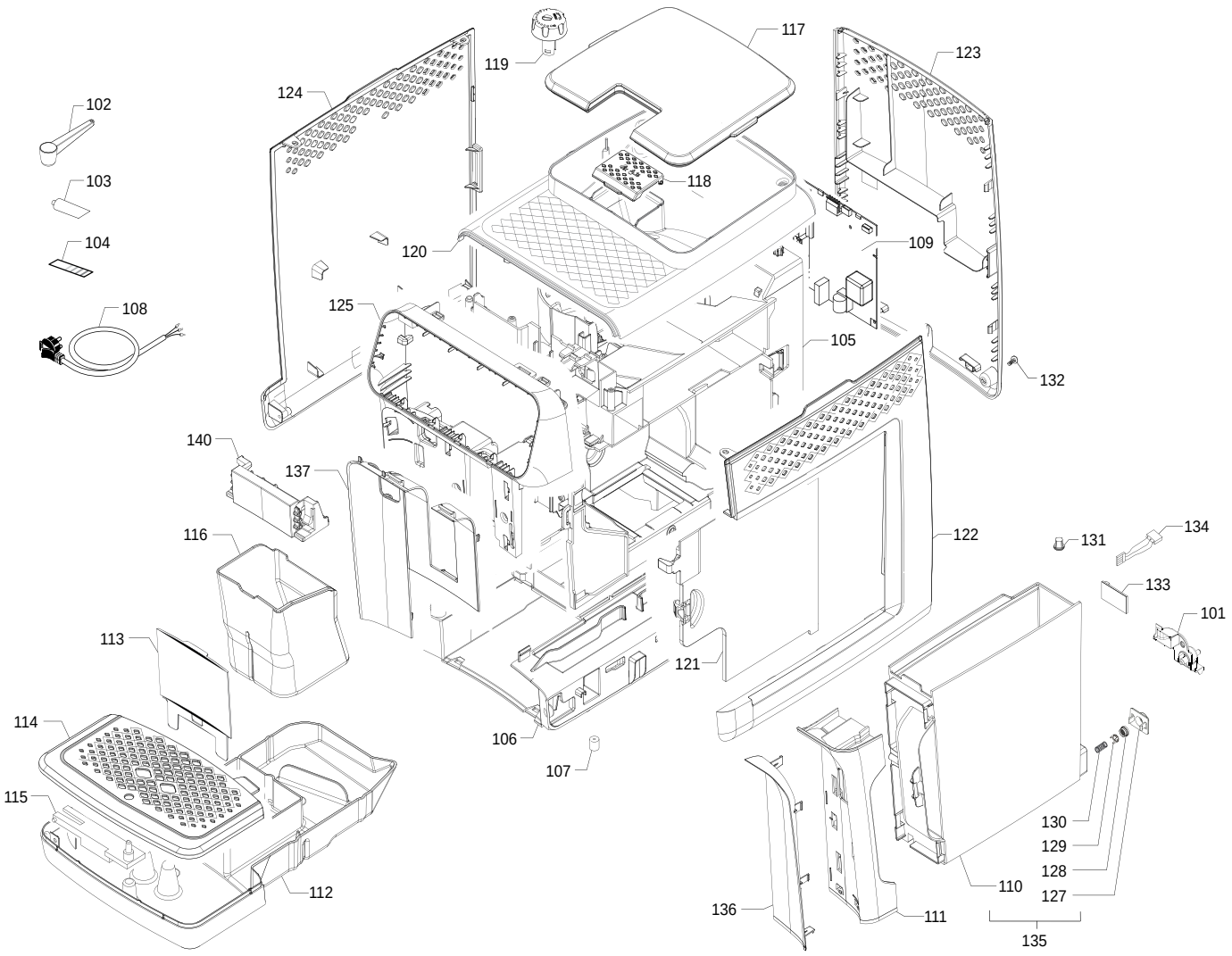

EP2035/40 EP2235/40 EP3242/60 EP2030/10
EP2131/62 EP3146/72/82/92 EP3243/50/70

EP2136/62/72 EP3241/50/54/74 EP3246/84

EP2230/10/12/13/14/15 EP3246/70/72/73/74

EP2231/40/42/43/44 EP3249/70 EP3546/70

Cod. 882870040830 882872440020-0400 882873660400 882870210830
Cod. 882873062710-2210 882873372710-82710-92710-92210 882872050020-400-70020-70400-70830
Cod. 882873162710- 2210-882873172210 882871650020-0400-0830-4820-74520 82872050010- 0300-882872070010
Cod. 882871310010-0300-2240-3470-4820-5240 882871770620-0220-0400-3470-0830-0020-4820-4860
Cod. 882871440020-0620-2410-0400-0830-3470-4860-0530 882872170020-0400 882871784660 882874170010

POS	12NC	DESCRIPTION	NOTE
121	421944082982	LATERAL DOOR V2 OMN	
122	421944082991	RIGHT PANEL OMN	
	421944092611	WHT RIGHT PANEL OMN/H-T	
		only for EP3243-EP3249-EP3146/92	
	421944094661	CASH RIGHT PANEL OMN/H-T	
123	421944083041	BACK PANEL OMN	
	421944092631	WHT BACK PANEL OMN	only for EP3146/92
	421944094681	BLK LEFT SIDE COVER OMN/B	EP3146/72-EP3246/84
124	421944082921	CASH BACK PANEL OMN	
	421944092591	WHT LEFT SIDE COVER OMN/B	
		only for EP3243-EP3249-EP3146/92	
	421944094691	CASH LEFT SIDE COVER OMN/B	EP3146/72-EP3246/84
125	421944082901	BLK FRONT UPPER CASING COVER OMN/H-T	
	421944085311	BLK FR.UP.CAS.COVER OMN/P-B	only for EP2230
	421944092531	WHT FRONT UPP.CAS.COV.OMN/H-T	
		only for EP3243-EP3249-EP3146/92	
	421945013931	CASH FRONT UPP.CAS.COV.OMP/H	EP3146/72-EP3246/84
127	421944040061	BLK LID FOR WATER CONT.VALVE V2 P0049	
128	421944040781	BLK GASKET FOR WATER CONT.VALVE V2 P0049	
129	421944040071	BLK WATER CONT.VALVE INSERT V2 P0049	
130	421941157841	SS SPRING FOR WATER CONTAIN. VALVE P0049	⚠
131	996530029115	EXTERNAL FILTER FOR WATER CONTAINER ASSY	⚠
	421941115951	WHT WATER CONTAINER EXT.FILTER ASSY	⚠
		only for EP2230/12/13/15 - EP2231/43 - EP3246/73 - EP3246/84 - EP3146/90 - EP3546/70 - EP3241/74	
132	421940212391	SCREW TCB TORX 3,5X30 PLAST.ZN-B	⚠
133	421941306721	CPU+SW WATER LEVEL SENSOR V3 ASSY	⚠
	421945002911	N.BOARD+SW WAT SENS OMN	⚠ 120-127V
		only for EP3546/70 - EP3241/74	
	421945046081	CPU+SW WAT. LEV. SENSOR V3 ASSY. ROM	
		only for EP2131/62 - EP2136/62/72 - EP3146/92	
134	421945025361	3 P.CONN.WATER LEV.CAP.V2 OMN UL AS. BZ	120V
	421945025321	3POLES CONN.FLOWMETER OMN UL ASSY V2 BZ	
		only for EP2231/43 - EP2230/12	
	421946045822	3 POLES CONN.WATER LEV.CAP.V2 OMN UL AS	
		only for EP3146/72/92-EP3242/60-EP3246/72/84 - EP2131/62 - EP2136/62/72-EP3546/70 - EP3241/74	
135	421944085741	WATER TANK OMN ASSY	
136	421944083001	DEEPBLK WATER CONT.HAND.COV.OMN/H-T	
	421944094531	WATER CONT.HAND.COV.SILV.SPEC.OMN/T	
		only for EP3246/70-EP3146/82 - EP2136/62 -	

POS	12NC	DESCRIPTION	NOTE
		EP3546/70	
	421944094561	WATER TANK HANDLE COVER OMN/H-T-PANTHERA-Q1	
		only for EP3242/60-EP3249/70	
	421944092431	Z/BROWN WATER CONT.HANDL.COV.OMN/H-T	
		only for EP2235/40-EP2235/40	
	421945015871	WATER CONT.HAND.COV.COPPER OMN/T	
		only for EP3146/72/92-EP3246/84	
137	421944082891	BLK INS.FRONT UPPER CASING COVER OMN/B	
		only for EP2131/62-EP2231/40/42/43-EP3241/50/74	
		EP3243/50 - EP2136/72	
	421944094511	INS.FR.UP.CAS.COV.SILVER SPEC OMN/T	
		only for EP2136/62-EP3146/82-EP3243/70	
		EP3246/70/72/73 - EP2136/62 - EP3546/70	
	421944094541	INS.FR.UP.CAS.COV.PANTERA OMN/T	
		only for EP3242/60-EP3249/70	
	421944092401	ZINK BROWN INS.FR.UPP.CAS.COV.OMN/B	
		only for EP2035/40-EP2235/40	
	421945015891	INS.FR.UP.CAS.COV.COPPER OMN/T	
		only for EP3146/72/92-EP3246/84	
140	421944085431	FRONT PANEL INSERT OMN	only for EP2230/12/13/15

IMPORTANT REPAIR INSTRUCTIONS: Only use genuine Philips spare parts to replace critical components.
The warranty of your Philips product is void if you do not use genuine Philips spare parts to repair critical components of your appliance.
The critical components are indicated with a warning triangle ⚠ in the service exploded view and/or service manual.

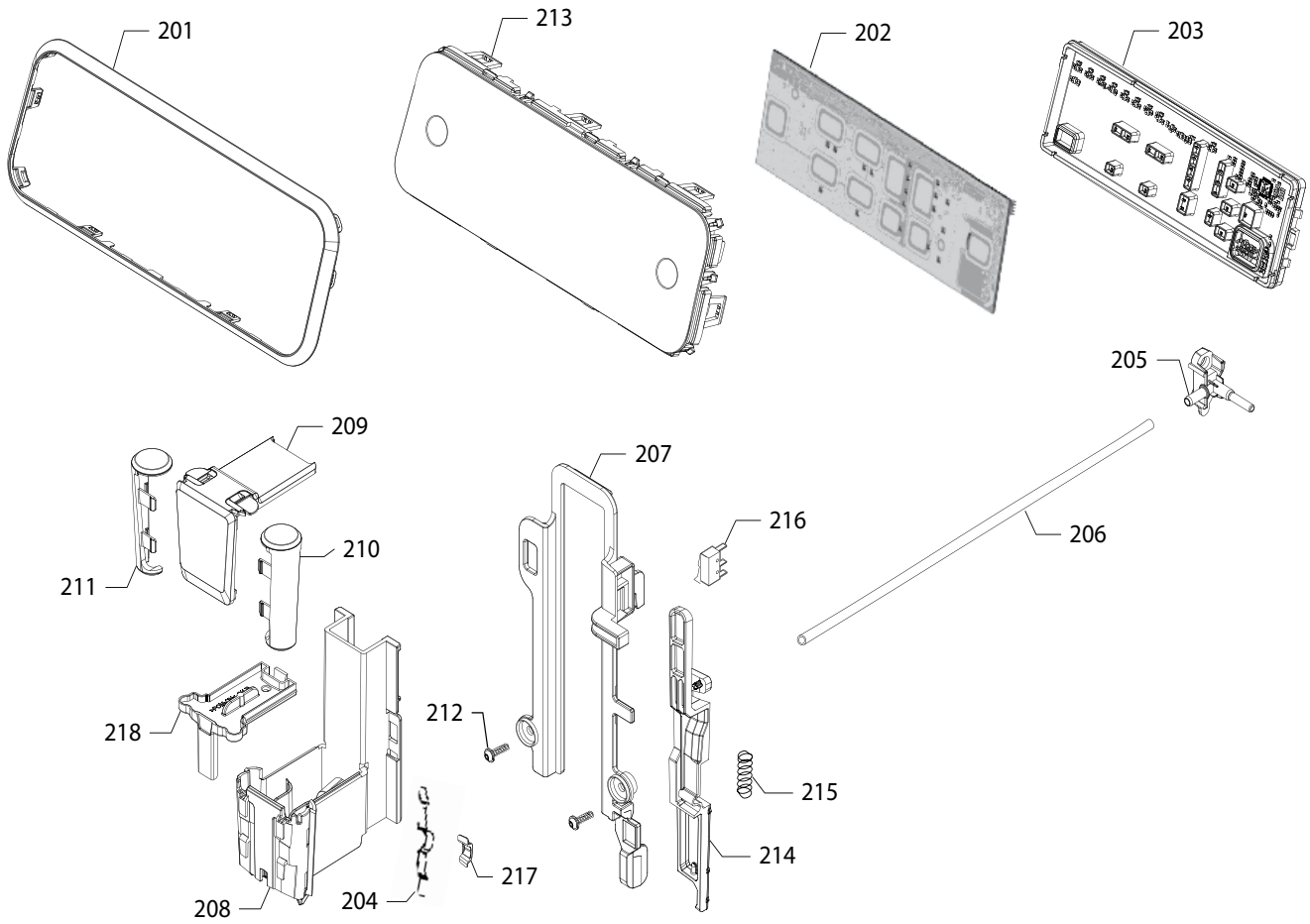

EP2035/40 EP2235/40 EP3242/60 EP2030/10 EP2131/62 EP3146/72/82/92 EP3243/50/70

EP2136/62/72 EP3241/50/54/74 EP3246/84

EP2230/10/12/13/14/15 EP3246/70/72/73/74

EP2231/40/42/43/44 EP3249/70 EP3546/70

Cod. 882870040830 882872440020-0400 882873660400 882870210830
Cod. 882873062710-2210 882873372710-82710-92710-92210 882872050020-400-70020-70400-70830
Cod. 882873162710- 2210-882873172210 882871650020-0400-0830-4820-74520 82872050010- 0300-882872070010
Cod. 882871310010-0300-2240-3470-4820-5240 882871770620-0220-0400-3470-0830-0020-4820-4860
Cod. 882871440020-0620-2410-0400-0830-3470-4860-0530 882872170020-0400 882871784660 882874170010

POS	12NC	DESCRIPTION	NOTE
201	421944083161	CHR.UI FRAME OMN/T	
	421945015831	COPPER UI FRAME OMN/T	
		only for EP3146/72/92 - EP3246/84 - EP2136/72	
202	421941311861	UI+SW TEST ENTRY OMN	⚠
		EP2035-2230-2231-2235 - EP2131- EP2136 -	
		EP2230/12 - EP2136/62/72	
	421941311901	UI+SW TEST BASIC OMN	⚠EP3241-3243-3246-3249
		only for EP3146/72/92-EP3242/60-EP3246/72	
	421945002801	UI+SW TEST ENTRY OMN LV	⚠EP1220-2220-30-31120V
	421945002791	UI+SW TEST BASIC OMN LV	⚠EP3241-EP3246 120V
	421945020741	UI+SW OMN_LV_ESLW	⚠EP2230/14 - EP2231/44
	421945020761	UI+SW OMN_LV_BSLW	⚠ EP3241/54 - EP3246/74
	421945023131	UI+SW TEST SYS. ENTRY OMN	only for EP2231/40
	421945022081	UI+SW TEST BASIC OMNW/T	only for EP3546/70
	421945055831	KIT UI+SW APP OMN/LVIC	only for EP3241/74
203	421944091571	WHT REAR COVER UI OMN/B	
	421944091511	WHT REAR COVER UI OMN/T	
		only for EP2231/40-EP3146/72/82/92-EP3241/50/54	
		EP3242/60-EP3243/50/70-EP3246/70/72/73/74/84	
		EP3249/70-EP3546/70	
	421945054501	WHT REAR COVER UI CWT OMN/T	only for EP3241/74
204	422224000542	SPOUT SPRING	
205	421944085411	BLK BREW UNIT COFFEE OUTLET CONN.OMN/B	
	421945006621	BLK COF.OUTLET CONN OMN CN	only for china
		only for EP2131/62 - EP2136/62/72 - EP3146/92	
206	421945001461	SILICONE TUBE 4X6.5 L=245 MM	
	421945054451	SILICONE TUBE 4X6.5 L=245 MM	only for EP3241/74
207	421944088081	COF.DISPENS.SUPP.OMN/B	
208	421944083201	BLK COF.DISPENS.EXT.MOBILE PART OMN/B	
		only for EP2230/15 - EP2231/43	
	421945006601	BLK COF.DISPENSER OMN CN	only for china
		only for EP2131/62 - EP2136/62/72 - EP3146/92	
	421945022602	BLK COF.DISP.EXT.MOB.PART V3 OMN/B	
		only for EP2230/12/13 - EP2231/43 - EP3246/73 -	
		EP3146/90 - EP2231/40 - EP3546/70 - EP3241/74	
209	421944090431	BLK UPP.COV.COFF.DISP.S/SCR.OMN/B	⚠
	421945017681	BLK UPP.COV.COFF.DISP.S/SCR.OMN/B	⚠
		only for EP2230/12/15	
210	421944088691	CHROM.RIGHT SIDE INS.COF.DISP.OMN/B	⚠
	421945015851	COPPER RIGHT SIDE INS.COF.DISP.OMN/B	⚠
		only for EP3146/72/92 - EP3246/84 - EP2136/72	

POS	12NC	DESCRIPTION	NOTE
211	421944088701	CHROM.LEFT SIDE INS.COF.DISP.OMN/B	⚠
	421945015861	COPPER LEFT SIDE INS.COF.DISP.OMN/B	⚠
		only for EP3146/72/92 - EP3246/84 - EP2136/72	
212	421940220061	SCREW TCBR TORX 10 3,5X12 PLAST.ZN-N	⚠
213	421944092861	BLK FRONT PANEL UI OMN/M3a S/SCR	
	421945005911	BLK FRONT PANEL UI OMN/T3b S/SCR.CH	EP3146/72/92-EP3146/92
	421945009341	BLK FRONT PANEL UI OMN/M3A S/SCR.	
		only for EP2230/14 - EP2231/44 - EP3241/54 -	
		EP3246/74	
	421945009381	BLK FRONT PANEL UI OMN/T3B 120V S/SCR	only for EP3246/84
	421945005901	BLK FRONT PANEL UI OMN/M3a S/SCR.CH	
		only for EP2131/62 - EP2136/62/72	
	421945021601	BLK FRONT PANEL UI OMNW/T S/SCR	only for EP3546/70
	421945053621	BLK FRONT PANEL UI T3B ICE 120V S/SCR.	only for EP3241/74
214	421944085422	DUMP BOX MISCROSWITCH LEVER V2 OMN	
215	421944092961	MICROSWITCH LEVER SPRING OMN	
216	421946043193	CONN.MICROSW.DOOR OMN UL ASSY V3	
	421945025301	CONN.MICROSW.DOOR OMN UL ASSY V3 BZ	
		only for EP2231/43 - EP2230/12 - EP2231/40	
	421945025291	CONN.MICROSW.DOOR OMN UL ASSY V3 PL	only for EP3241/74
217	421945006071	WHT COFFEE DISPENSER SLIDER OMN/B	
218	421945006591	INTERNAL COVER OMN/B	

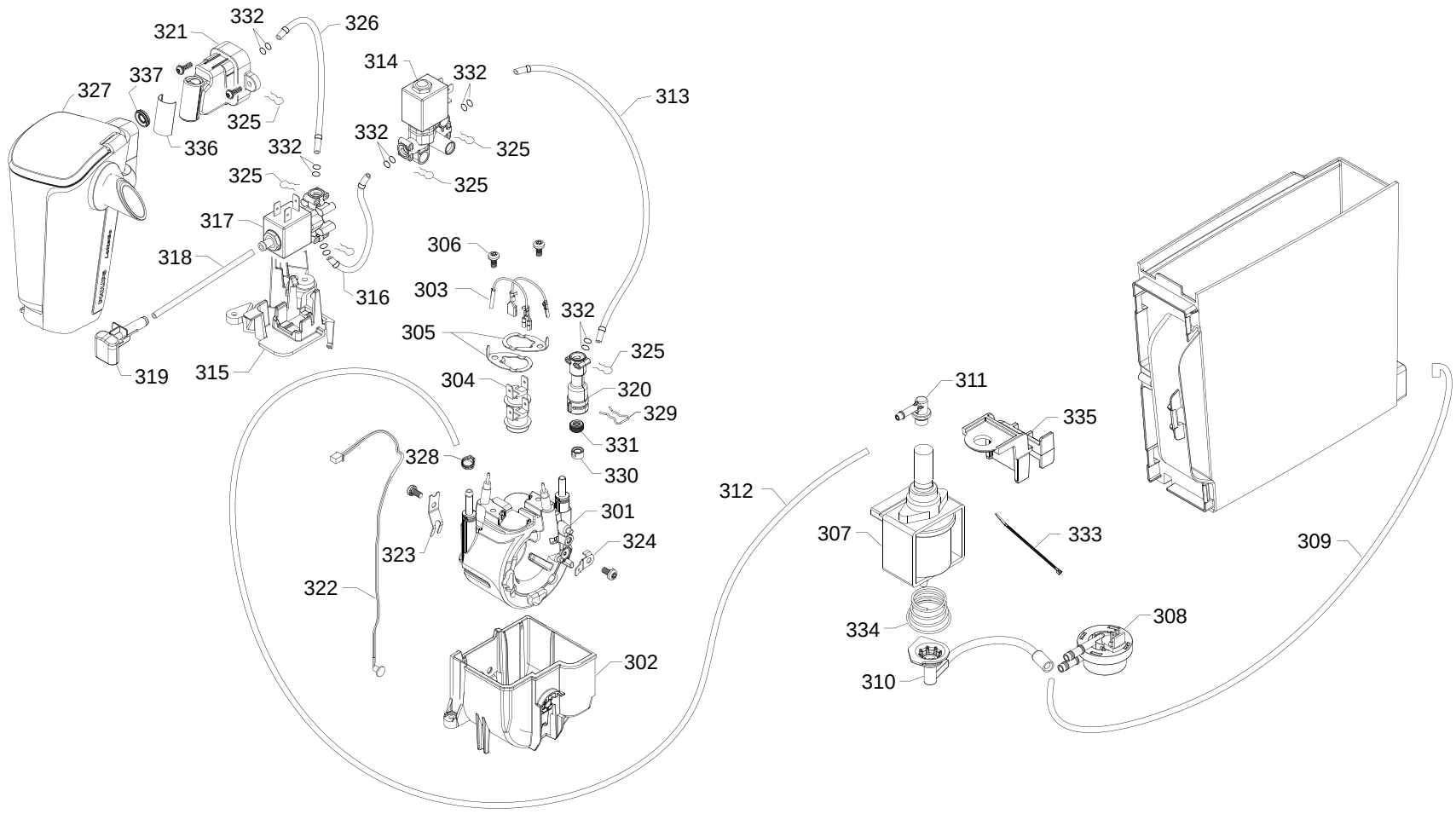

EP2035/40 EP2235/40 EP3242/60 EP2030/10
EP2131/62 EP3146/72/82/92 EP3243/50/70

EP2136/62/72 EP3241/50/54/74 EP3246/84

EP2230/10/12/13/14/15 EP3246/70/72/73/74

EP2231/40/42/43/44 EP3249/70 EP3546/70

Cod. 882870040830 882872440020-0400 882873660400 882870210830
Cod. 882873062710-2210 882873372710-82710-92710-92210 882872050020-400-70020-70400-70830

Cod. 882873162710- 2210-882873172210 882871650020-0400-0830-4820-74520 82872050010- 0300-882872070010

Cod. 882871310010-0300-2240-3470-4820-5240 882871770620-0220-0400-3470-0830-0020-4820-4860

Cod. 882871440020-0620-2410-0400-0830-3470-4860-0530 882872170020-0400 882871784660 882874170010

POS	12NC	DESCRIPTION	NOTE
301	421944082941	THERMOBLOCK OMN ASSY	⚠
		only for EP2230/12 - EP2231/40 - EP2131/62 - EP2136/62/72 - EP3146/92 - EP3546/70	
	421945003491	THERMOBLOCK 127V OMN ASSY	⚠ 120V
	421945008121	THERMOBLOCK 220V OMN/CN ASSY	⚠ only for china
302	421944082951	THERMOBLOCK SUPP.OMN	⚠
303	421945002031	CABLE 1 WIRE BLK BOILER OMN UL	⚠ only for EP3241/74
	421946043141	THERMOBLOCK WIRE ASSY	⚠
304	262279998757	THERMOSTAT OPEN/CLOSE 190/-35DEGC B	⚠
305	422224002162	FUSE CLAMP	⚠
306	421940212071	SCREW TCB TORX 20 M4X8 AUTOFORMING ZN-B	⚠
307	421941305991	ULKA PUMP EP5FMGW 230V-50HZ	⚠
	421944081531	ULKA PUMP EFP5/S 120V-60HZ	⚠ 120V
		EP2230/14 - EP2231/44 - EP3241/54/74 - EP3246/74/84	
	421940219771	ULKA PUMP EP5/S GW 220V-60HZ	⚠
		only for EP2230/13 - EP2231/43 - EP3246/73 - EP2230/12	
308	421940207701	TURBINE D=1,2 932-9521/B ASSY	⚠
309	422224708411	FM INLET HOSE	
310	422224708391	FM OUTLET HOSE	
311	421944090252	BLACK 90°CONNECTOR PUMP OUTLET V2	⚠
312	421944065471	PINK 5X8,9 SILICONE TUBE L=140 MM	
313	421944091581	TEFLON TUBE 2X4 L=200MM+2BUSH 7/7 ASSY	
314	421944082931	EV OMN ASSY	⚠
		only for EP2230/12 - EP2231/40 - EP2131/62 - EP2136/62/72 - EP3146/92 - EP3546/70	
	421945004501	EV ASSEMBLY-UL OMN	⚠ 120V
315	421945001451	SUPP.3WAY_VALVE OMN/T	
		only for EP2230/12 - EP2231/40 - EP2131/62 - EP2136/62/72 - EP3146/92 - EP3546/70	
	421945004751	SUPP.3WAY_VALVE OMN/T	120V
316	421941128281	TEFLON TUBE 2X4 L=180 MM ASSY	
317	421945001441	PLAST.3W.EV V395VN20PA02	⚠
		only for EP2230/12 - EP2136/62/72 - EP3146/92 - EP2131/62	
	421945004511	PLAST.3W.EV-UL OMN	⚠ 120V
	421945024511	PLAST.3W.EV V395VN20PADA02	
		only for EP2231/40 - EP3546/70	
	421945024531	PLAST.3W.EV-UL V395VN20PADR2A	only for EP3241/74
318	421945001911	SILICON TUBE 5X8 70SH L=470MM	
319	421945002121	DISCHARGE CONNECTOR OMN/T	
320	422224777123	TB INLET CONNECTOR	

POS	12NC	DESCRIPTION	NOTE
321	421945007941	BLK STEAM SPOUT BODY OMN ASSY	
		only for EP2230/12 - EP2231/40 - EP3241/74	
	421945002101	BLK/SS STEAM SPOUT BODY OMN ASSY	only for EP3243-3246
	421944089051	SS HOT WATER DISPENSER OMN/T	
		only for EP3146/72/82/92-EP3246/84 - EP3546/70	
	421945012201	BLK STEAM SPOUT BODY OMN-CN ASSY	
		only for EP2131/62 - EP2136/62/72	
322	421946046921	TEMPERATURE SENSOR NTC OMN	⚠
323	422224002171	NTC CLAMP	⚠
324	422224006892	EARTH TERMINAL	⚠
325	421941058941	SS FORK FOR TUBE D.4	
326	421945001651	TEFLON TUBE 2X4 L=210 MM ASSY.	
327	421945016211	TR/BLK GEN.CARAFE SW ASSY/B	
	421945044211	TR/BLK GEN.CARAFE SW V2 ASSY	
		only for EP3241/50/54/74, EP3246/70/72/73/74/79/84, EP3243/50/70, EP3249/70, EP3146/90, EP3242/60, EP3546/70	
	421945021811	TR/BLK GEN.CARAFE SW ASSY/B CN	
		only for EP2131/62 EP2136/62/72	
	421945044221	TR/BLK GEN.CARAFE SW V2 CN ASSY	
		only for EP3146/72/82/92	
328	421940221091	OETIKER EAR CLAMP 16707295 009.6-505	
329	422224002241	FORK FOR D=8MM	
330	422224777092	TB SEAL SPACER	
331	422224708381	THERMOBLOCK SEAL	
332	996530013564	OR 2015 SILICONE PTFE/FDA	
333	421940213981	SELF LOCK STRIP W=2.6 L=200	
334	422224002181	PUMP SPRING	

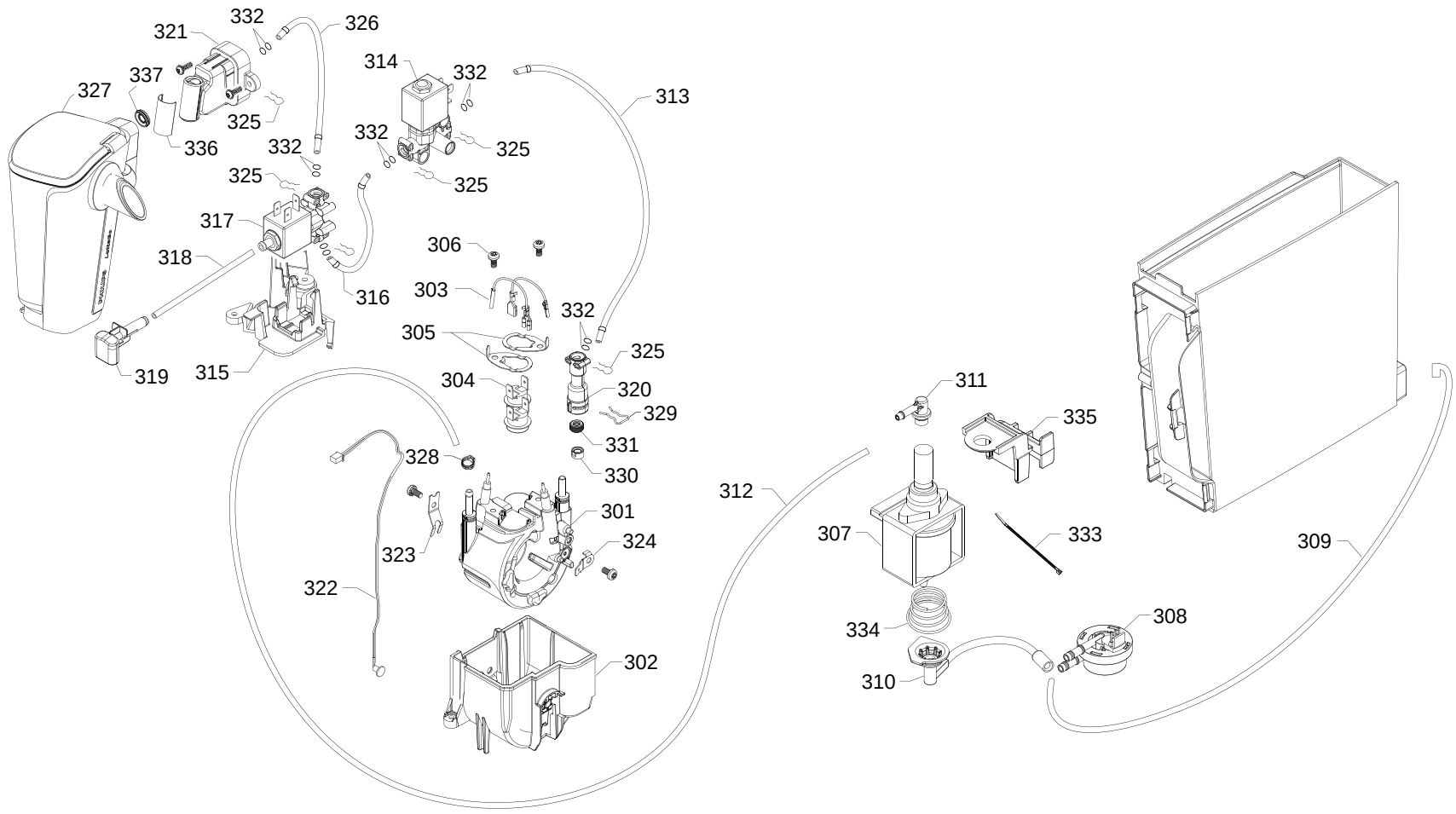

EP2035/40 EP2235/40 EP3242/60 EP2030/10
EP2131/62 EP3146/72/82/92 EP3243/50/70

EP2136/62/72 EP3241/50/54/74 EP3246/84

EP2230/10/12/13/14/15 EP3246/70/72/73/74

EP2231/40/42/43/44 EP3249/70 EP3546/70

Cod. 882870040830 882872440020-0400 882873660400 882870210830
Cod. 882873062710-2210 882873372710-82710-92710-92210 882872050020-400-70020-70400-70830

Cod. 882873162710- 2210-882873172210 882871650020-0400-0830-4820-74520 82872050010- 0300-882872070010

Cod. 882871310010-0300-2240-3470-4820-5240 882871770620-0220-0400-3470-0830-0020-4820-4860

Cod. 882871440020-0620-2410-0400-0830-3470-4860-0530 882872170020-0400 882871784660 882874170010

POS	12NC	DESCRIPTION	NOTE
335	421945020921	PUMP RUBBER SUPPORT OMN	
		only for EP2230/12 - EP2231/40 - EP2131/62 - EP2136/62/72 - EP3146/92 - EP3546/70 - EP3241/74	
	421944088662	PUMP RUBBER SUPPORT V2 OMN	
		only for EP2131/62-EP2136/62-EP3146/82	
336	421944083571	SS STEAM SPOUT COVER SMRE/MH	
	421944083581	BLK STEAM SPOUT SMRE/M	
		only for EP2231/40/42/43 - EP2230/12 - EP3241/74	
	421945012081	BLK STEAM SPOUT-CN SMRE/M	
		only for EP2131/62 - EP2136/62/72 - EP3146/92	
337	421944083451	BLK CARAFE CONN.LG	

POS	12NC	DESCRIPTION	NOTE

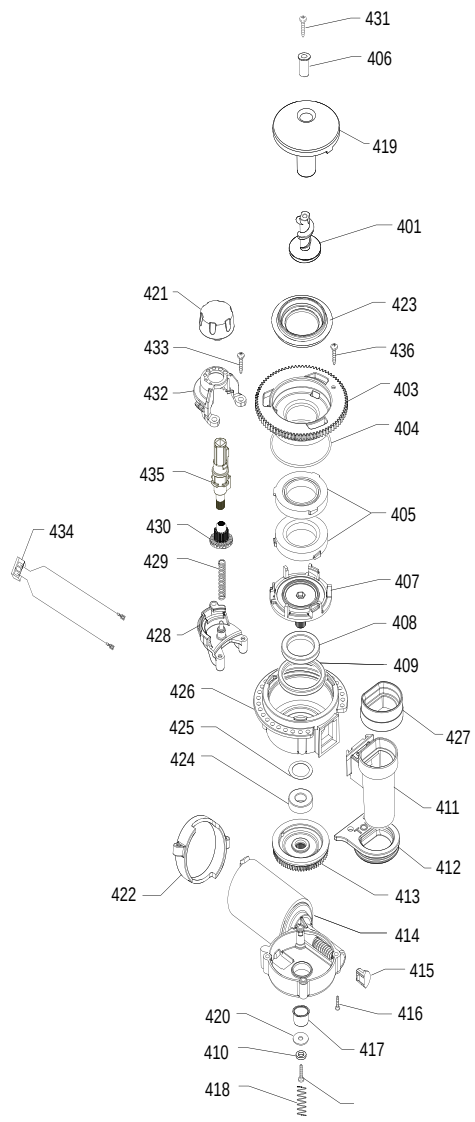

EP2035/40 EP2235/40 EP3242/60 EP2030/10
EP2131/62 EP3146/72/82/92 EP3243/50/70

EP2136/62/72 EP3241/50/54/74 EP3246/84

EP2230/10/12/13/14/15 EP3246/70/72/73/74

EP2231/40/42/43/44 EP3249/70 EP3546/70

Cod. 882870040830 882872440020-0400 882873660400 882870210830
Cod. 882873062710-2210 882873372710-82710-92710-92210 882872050020-400-70020-70400-70830

Cod. 882873162710- 2210-882873172210 882871650020-0400-0830-4820-74520 82872050010- 0300-882872070010

Cod. 882871310010-0300-2240-3470-4820-5240 882871770620-0220-0400-3470-0830-0020-4820-4860

Cod. 882871440020-0620-2410-0400-0830-3470-4860-0530 882872170020-0400 882871784660 882874170010

POS	12NC	DESCRIPTION	NOTE
401	421944032693	GRIVORY INCREASE SCREW GRINDER V3	
402	996530012928	SCREW TCB TORX 20 M4X30 ZN-B	
403	421941094152	BLK COF.GRINDER UPPER GRINDER SUPPORT V2	
404	996530013577	OR ORM 0530-15 NBR FDA	
405	996530016342	BAKED CLAY GRINDER 48X28	
406	421944079881	BRASS BUSH BEAN CONT.FINGER PROTEC.FTR/B	
	421945000721	BLK.BUSH BEAN CONT.FINGER PROTEC	
		only for EP2230/12/13/15 - EP2231/40/43 - EP3246/73 - EP3146/90 - EP3546/70 - EP3241/74	
407	996530017952	BLK LOWER COFFEEGRINDER GRINDER SUPPORT	
408	996530011183	AXIAL BEARING EKKO 342.35252	
409	996530013597	FELT RING 45,4X39,4X4	
410	996530012341	GALV.WASHER UNI 8842 A4	
411	421941230122	BLK GROUND COFF.OUTLET CONV. V2 ASSY	
412	421944060561	GRY GROUND COF.CONT.LOWER SEAL V2 SMART1	
413	996530029609	GEAR SX Z=38 FOR GRINDER MOTION ASSY	⚠
		only for EP2035/40-EP2230/10-EP2231/40-EP2235/40 EP3241/50-EP3243/50/70-EP3246/70-EP3249/70	
	421945006091	GRY GEAR SX Z=38 FOR GRINDER MOTION	⚠
		only for EP2231/40 - EP2131/62 - EP2136/62/72 - EP3146/92 - EP3546/70	
	421945046381	GRY GEAR SX Z=38 V2 FOR GRINDER MOTION	
414	421944049151	MOTOR COFFEEGRINDER V3.2 230V ASSY	⚠
	421944084071	MOTOR COFFEEGRINDER V3.2 WZN 120V ASSY	⚠
		EP2230/14 - EP2231/44 - EP3241/54/74 - EP3246/74/84	
	421945043971	COFFEE GRINDER MOTOR V4 230V DOMEL	only for EP3546/70
415	996530018139	MC V3 MOD=1,25 WORM SCREW CENTRING CAP	
416	996530012992	SCREW TCB TORX 3,5X30 PLAST.ZN-B	
417	996530001389	INSULATOR BUSH FOR GRINDER MOTOR P124	
	421941154362	INSULATOR BUSH V2 FOR GRINDER MOTOR	
		only for EP2131/62 - EP2136/62/72 - EP3146/92 - EP3241/74	
418	996530000376	STEEL COF.GRINDER SUPPORT SPRING P124	
419	421944094591	GRINDER FINGER PROTECT.OMN	
	421945024711	GRINDER FINGER PROTECT.OMN	
		only for EP2230/14 - EP2231/40/43/44 - EP3146/72/92 EP3241/54/74 - EP3242/60-EP3246/72/74/84 - EP2131/62 - EP2136/62/72 - EP3546/70	
420	996530012375	GALVAN.FLAT WASH.DI=4,3 DE=14 SP=1,5	
421	421944075151	BLK GRIND.ADJUST.KNOB 10 POS. SMR	
422	421941142172	BLK COFFEEGRINDER MOTOR SUPP.P124 V2	
	996530000115	BLACK GRINDER MOTOR SUPPORT P124	only for EP2030/10
423	421941085872	COFFEE GRINDER SEAL P119 GRY 7035	
424	996530011182	RADIAL BEARING 61900.2RS1	

POS	12NC	DESCRIPTION	NOTE
425	996530012374	STEEL CRINKLE WASHER 21,8X14X0,25	
426	421941082802	BLK UPPER BODY WITH COFFEE GROUND OUT.V2	
	996530015258	UPPER BODY WITH COFFE.GROUND OUTLET	only for EP2030/10
427	996530015958	BLK GROUND COFFEE CONT.UPPER SEAL SMART1	
428	996530001314	LOWER COFFEEGRINDER GEAR SUPPORT P124	
429	996530001308	COFFEEGRINDER REGULATION SPRING P124	
430	996530001907	COFFEE GRINDING ADJUSTMENT GEAR P0049	
431	421940212391	SCREW TCB TORX 3,5X30 PLAST.ZN-B	
432	996530001296	UPPER COFFEEGRINDER GEAR SUPPORT P124	
433	996530013165	SCREW TCB TORX 10 3,5X16 PLAST.ZN-B	
434	996530073454	2POLES CONNET.COFFEEGRINDER MOTOR SMR UL	
	421946043182	2POLES CONN.MICROSW.DOOR OMN UL ASSY	
		only for EP2230/14 - EP2231/40/43/44 - EP3146/72/92 EP3241/54/74 - EP3242/60-EP3246/72/74/84 - EP2131/62 - EP2136/62/72 - EP3546/70	
435	421944052341	BLW BEAN COFFEE GRINDER INSERT V2 SMR	
436	421940213291	SCREW TCB TORX 10 3X8 PLAST.ZN-B	
	421944092371	GEN.MOTOR COF.GRINDER OMN 230V ASSY	
	421944092381	GEN.MOTOR COF.GRINDER OMN 120V ASSY	
	421945052601	GEN.MOT.COF.GRINDER V2 OMN 230V ASSY	only for EP3546/70

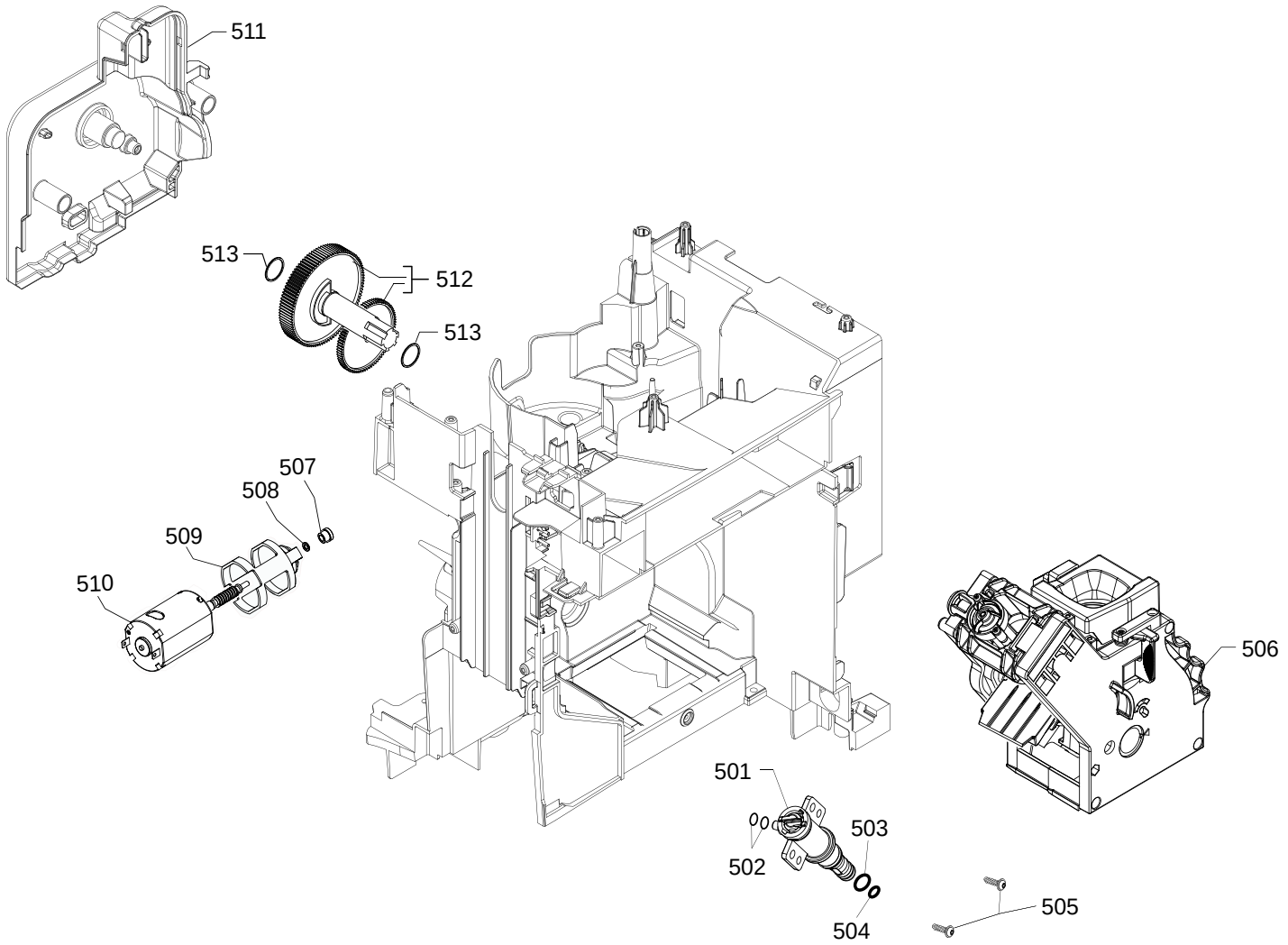

EP2035/40 EP2235/40 EP3242/60 EP2030/10
EP2131/62 EP3146/72/82/92 EP3243/50/70

EP2136/62/72 EP3241/50/54/74 EP3246/84

EP2230/10/12/13/14/15 EP3246/70/72/73/74

EP2231/40/42/43/44 EP3249/70 EP3546/70

Cod. 882870040830 882872440020-0400 882873660400 882870210830
Cod. 882873062710-2210 882873372710-82710-92710-92210 882872050020-400-70020-70400-70830

Cod. 882873162710- 2210-882873172210 882871650020-0400-0830-4820-74520 82872050010- 0300-882872070010

Cod. 882871310010-0300-2240-3470-4820-5240 882871770620-0220-0400-3470-0830-0020-4820-4860

Cod. 882871440020-0620-2410-0400-0830-3470-4860-0530 882872170020-0400 882871784660 882874170010

POS	12NC	DESCRIPTION	NOTE
501	421945045521	PIN FOR BOILER OMN ASSY V3	
502	996530013564	OR 2015 SILICONE PTFE/FDA	
503	421945039071	OR ORM 0090-20 RED MG8037R70P	
504	996530059419	OR ORM 0050-20 IN SILICONE	
505	996530070321	SCREW TCBR TORX 10 3,5X12 PLAST.SS	
	421940220061	SCREW TCBR TORX 10 3,5X12 PLAST.ZN-N	
		only for EP2131/62 - EP2231/40 - EP2136/62/72 - EP3146/92	
506	421944093343	BLK/YLW BREW UNIT 8GR 5BAR V3 OMN	
	421945017481	BLK/YLW BREW UNIT 8GR 5BAR OMN/CN (2ND)	only for china
	421944092331	BLK/YLW BREW UNIT 8GR.5BAR FTR/B V3	
		EP2230/14 - EP2231/44 - EP3241/54 - EP3246/74/84 - EP3241/74	
	421945008142	BLK/YLW BREW UNIT 8GR 5BAR V2 OMN/CN	
		only for EP2131/62 - EP3146/72/90/92 - EP2136/62/72 - EP3146/92	
	421945025202	BLK/YLW BREW UNIT 8GR 5BAR OMN V3 2ND	only for EP2231/40
507	996530049898	BRONZE SINTERED BUSH FOR MOTOR RATIOMOT	
508	996530017424	BAKELIZZATE WASHER D=5,5	
509	996530049896	ANTIVIBRATION FOR MOTOR	
510	996530002796	MOTOR FOR RATIOMOTOR P124 ASSY.	⚠
		only for EP2231/40 - EP3246/84 - EP2131/62 - EP2136/62/72 - EP3146/92 - EP3546/70 - EP3241/74	
	421945013971	MOTOR FOR RATIOMOTOR P124 ASSY TWN	⚠
511	421944082961	BREW UNIT MOTOR COVER OMN	
		only for EP2231/40 - EP3246/84 - EP2131/62 - EP2136/62/72 - EP3146/92 - EP3546/70	
	421945004721	BREW UNIT MOTOR COVER UL OMN	120V
512	996530009913	SPARES KIT GEARS FOR RATIOMOTOR V2	⚠
513	996530050569	MYLAR WASHER FOR RATIOMOTOR	

POS	12NC	DESCRIPTION	NOTE

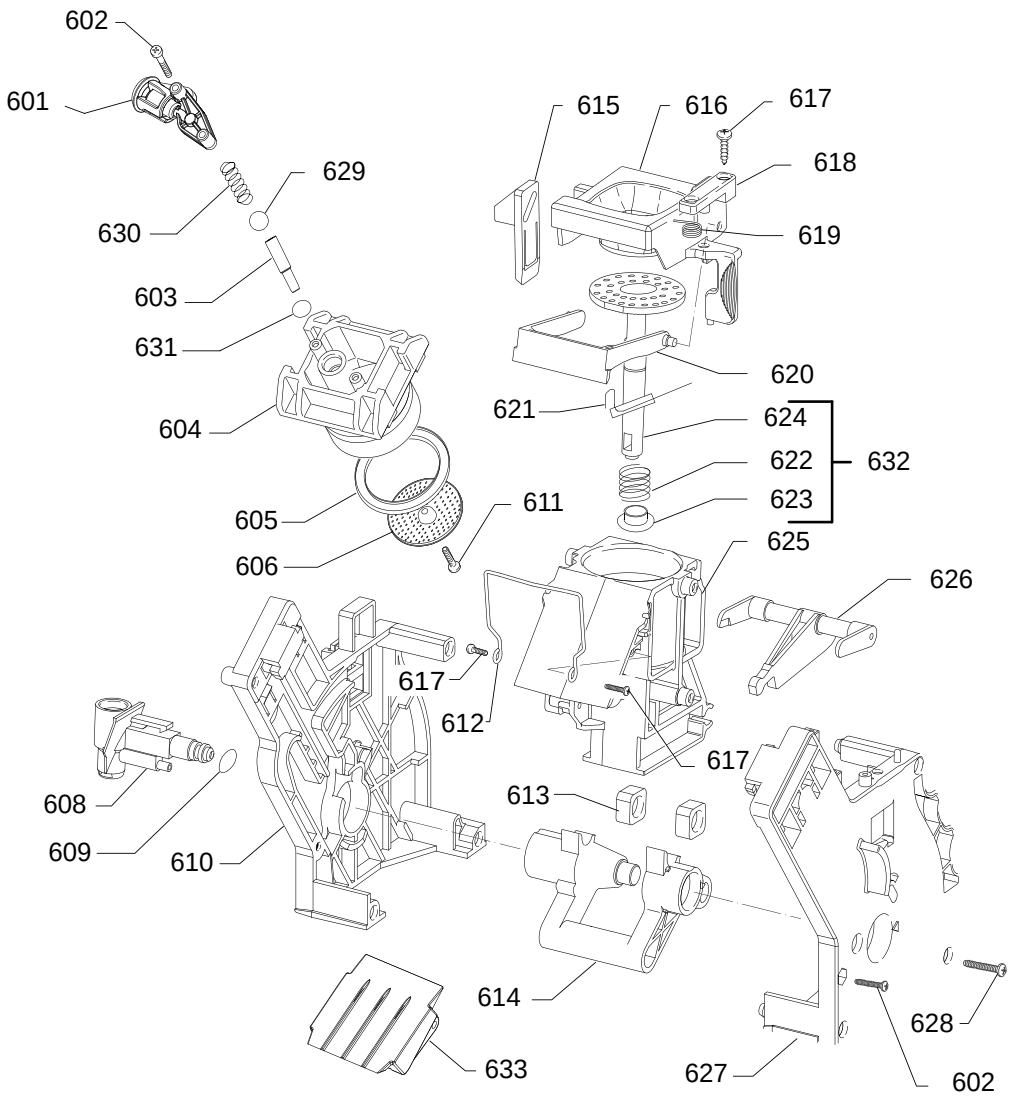

EP2035/40 EP2235/40 EP3242/60 EP2030/10 EP2131/62 EP3146/72/82/92 EP3243/50/70

EP2136/62/72 EP3241/50/54/74 EP3246/84

EP2230/10/12/13/14/15 EP3246/70/72/73/74

EP2231/40/42/43/44 EP3249/70 EP3546/70

Cod. 882870040830 882872440020-0400 882873660400 882870210830
Cod. 882873062710-2210 882873372710-82710-92710-92210 882872050020-400-70020-70400-70830

Cod. 882873162710- 2210-882873172210 882871650020-0400-0830-4820-74520 82872050010- 0300-882872070010

Cod. 882871310010-0300-2240-3470-4820-5240 882871770620-0220-0400-3470-0830-0020-4820-4860

Cod. 882871440020-0620-2410-0400-0830-3470-4860-0530 882872170020-0400 882871784660 882874170010

POS	12NC	DESCRIPTION	NOTE
601	421944065222	BLK BREW UNIT COF.OUT.SLEEVE V2 SMR ASSY	
	421945008181	BLK BREW UNIT COF.OUT.SLEEVE V3 SMR ASSY	only for china
	421945026582	BLK BREW UNIT COF.OUT.SLEEVE V3 OMN AS	
		only for EP2231/40 - EP3246/70 - EP3546/70 - EP3241/74	
	421945026592	BLK BREW UNIT COF.OUT.SLEEVE V4 OMN ASSY	
		only for EP2131/62 - EP2136/62/72 - EP3146/92	
602	996530007838	SCREW TCB TORX 10 3X25 PLAST.SS	
603	996530005372	TUBE FOR COUNTER PISTON BREW UNIT S0053	only for china
	421945003871	BLK BREW UN.COUNTER PISTON TUBE V3 S0053	
		only for EP2131/62 - EP3146/72/82/92 - EP2136/62 - EP2136/62/72	
	421944079291	BLK BREW UN.COUNTER PISTON TUBE V2 S0053	
		EP2230/13/14 - EP2231/40/43/44 - EP3241/54 - EP3246/73/74 - EP3546/70 - EP3241/74	
604	996530001046	BLACK COUNTER PISTON BREW UNIT 8GR.P124	only for china
	421945003891	BLK BREW UNIT 8GR.COUNTER PISTON V3 P124	
		EP2131/62 - EP2136/62 - EP3146/72/82/92 - EP2136/62/72	
	421944079991	BLK BREW UNIT 8GR.COUNTER PISTON V2 P124	
		only for EP2230/13/14-EP2231/43/44-EP3241/54/74-EP3242/60/72-EP3246/73/74/84-EP3546/70	
	421944091751	BLK BREW UNIT 8GR.COUNTER PISTON V2	
		only for EP2231/40 - EP3246/70	
605	996530059406	OR ORM 0320-40 SILICONE PTFE/FDA	
606	996530050709	PERCOLATOR DE=35,8 ELFO	
	421945025332	PERCOLATOR DE=35,8 V2	
		only for EP2231/40/43-EP3242/60-EP3246/72/84 EP3146/72/92 - EP2131/62 - EP2136/62/72-EP3546/70 - EP3241/74	
608	421945002572	BREW NEU. UN.WATER INLET SLEEVE V4	
	421944050641	BREW UN.WATER INLET SLEEVE V2 SMR	
		EP2230/14/15-EP2231/44-EP3241/54/74-EP3246/74/84	
	421941188082	BLK BREW UNIT COF.OUTLET SLEEVE V2 S0053	only for EP2230/15
	421944093332	BREW UN.WATER INLET SLEEVE V4	
		only for EP2131/62 - EP3146/72/84/92 - EP2136/62/72	
609	421940207151	OR 2025 NBR FDA	
610	996530050832	BLACK BREW UNIT REAR PLATE SMART	
	421944091731	BLK BREW UNIT REAR PLATE V2 SMR	
		only for EP2231/40 - EP3146/90	
	421941065071	BLK BREW UNIT REAR PLATE SMART	
		only for EP2131/62 - EP2136/62/72 - EP3146/92 - EP3546/70	
611	996530007951	SCREW TSP TORX 10 3X10 PLAST.SS	
612	421944025811	SS BREW UNIT SPRING H=49 PK	
	421945044171	SS BREW UNIT SPRING H=49 PK V2	
		only for EP2131/62 - EP2136/62/72 - EP3146/92	
613	996530050539	BLACK BREW UNIT DRILLED BLOCK	
614	421944051231	YLW BREW UNIT ELBOW SHAFT M5000	
	421944079201	YLW BREW UNIT ELBOW SHAFT V2 M5000	
		only for EP2230/14 - EP2231/43/44 - EP3241/54/74 - EP3246/74-EP3246/72/84-EP3146/72/92 - EP2131/62 - EP2136/62/72 - EP3546/70	
	421944091781	YLW BREW UNIT ELBOW SHAFT M5000 V2	
		only for EP2231/40 - EP3146/90	
615	421944046932	YLW BREW UNIT COUPLING PLATE V3 SMART	
	421944091791	YLW BREW UNIT COUPLING PLATE V3 SMART	
		only for EP2231/40 - EP3146/90	
616	996530018241	BLACK HOPPER DOSER BREW UNIT SMART1	
	421944079552	BLK BREW UNIT V2 SMART1 HOPPER DOSER	only for china
		only for EP2131/62 - EP2136/62/72 - EP3146/92	
	421941095982	BLK BREW UNIT V3 SMART1 HOPPER DOSER	
		only for EP2230/14 - EP2231/43/44 - EP3241/54 - EP3246/74-EP3246/72/84-EP3146/72 - EP3546/70	
	421945014151	BLK BREW UNIT V5 SMART1 HOPPER DOSER	
		only for EP2231/40 - EP3146/90	
	421945040431	BLK BREW UNIT V5 SMART1 HOPPER DOSER	only for EP3241/74
617	996530013148	SCREW TCBR TORX 10 3,5X14 PLAST.SS	
618	421944050711	YLW BREWUNIT HOPPER BLOCKING PLATE SMART	
	421941065051	BLK BREWUNIT HOPPER BLOCKING PLATE SMART	
		only for EP2230/14 - EP2231/43/44 - EP3241/54/74 - EP3246/72/74/84 - EP3242/60 - EP3146/72/92 - EP2131/62 - EP2136/62/72 - EP3546/70	
	421944091801	BLK BU HOPPER BLOCKING PLATE V2 SMART	only for EP2231/40
619	996530050838	SPRING HOPPER SMART BREW UNIT	
620	996530002096	BLACK SCRAPER FOR BREW UNIT M5000	only for china
	421945003961	BLK BREW UNIT SCRAPER V3 M5000	
		only for EP2131/62 - EP2136/62/72 - EP3146/92	
	421944079261	BLK BREW UNIT SCRAPER V2 M5000	
		only for EP2230/13/14 - EP2231/40/43/44 - EP3241/54 EP3246/73/74/84 - EP3242/60	
	421944091771	BLK BREW UNIT SCRAPER M5000 V2	only for EP3546/70
	421945040461	BLK BREW UNIT SCRAPER V4 M5000	only for EP3241/74

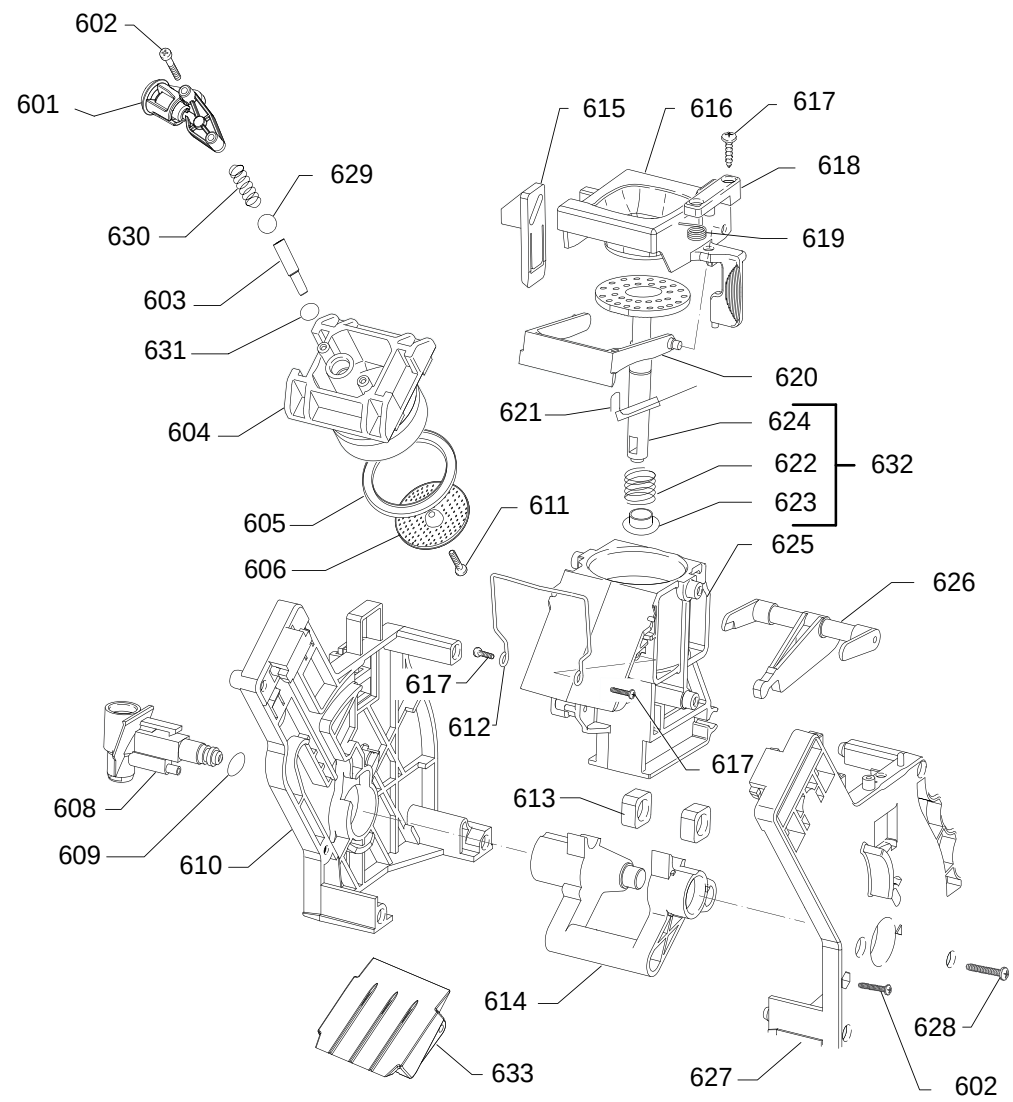

EP2035/40 EP2235/40 EP3242/60 EP2030/10
EP2131/62 EP3146/72/82/92 EP3243/50/70

EP2136/62/72 EP3241/50/54/74 EP3246/84

EP2230/10/12/13/14/15 EP3246/70/72/73/74

EP2231/40/42/43/44 EP3249/70 EP3546/70

Cod. 882870040830 882872440020-0400 882873660400 882870210830
Cod. 882873062710-2210 882873372710-82710-92710-92210 882872050020-400-70020-70400-70830
Cod. 882873162710- 2210-882873172210 882871650020-0400-0830-4820-74520 82872050010- 0300-882872070010
Cod. 882871310010-0300-2240-3470-4820-5240 882871770620-0220-0400-3470-0830-0020-4820-4860
Cod. 882871440020-0620-2410-0400-0830-3470-4860-0530 882872170020-0400 882871784660 882874170010

POS	12NC	DESCRIPTION	NOTE
621	996530050455	SS SCRAPER SPRING FOR BREW UNIT	
622	996530050627	SS.8GR.BREW UNIT PISTON SPRING	
623	996530050618	WHITE 8GR.-12GR.BREW UNIT PISTON BUSH	
624	421944065791	GRY BREW UNIT INTEGR.PISTON 8GR.V3 ASSY	
	421944079491	GRY BREW UNIT INTEGR.PISTON 8GR.V4 ASSY	
		only for EP2230/13/14 - EP2231/44/44 - EP3241/54/74 - EP3246/72/73/74/84 - EP3146/72/92 - EP3242/60 - EP3546/70	
	421945014181	BLK BREW UNIT INTEGR.PISTON 8GR.V5 ASSY	
		only for EP2231/40 - EP3146/90	
	421945003941	GRY BREW UNIT INTEGR.PISTON 8GR.V5 ASSY	
		only for EP2136/72 - EP2131/62 - EP2136/62/72 - EP3146/92	
625	421944014611	BLK COF.CONTAIN.BREW UNIT V2 M5000 ASSY.	
	421945003921	BLK COF.CONTAIN.BREW UNIT V5 M5000 ASSY	only for china
		only for EP2131/62 - EP2136/62/72 - EP3146/92	
	421944079431	BLK COF.CONTAIN.BREW UNIT V4 M5000 ASSY	
		EP2230/13/14 - EP2231/43/44 - EP3241/54/74 - EP3246/72/73/74 /84 - EP3242/60 - EP3146/72/92	
	421945013822	BLK COF.CONTAIN.BREW UNIT V5 ASSY	
		only for EP2231/40 - EP2136/72	
	421945023671	BLK COF.CONTAIN.BREW UNIT V6 ASSY	only for EP3546/70
626	996530001452	BLACK CONNECTING ROD BREW UNIT 8GR.	
	421944091761	BLK BREW UNIT 8GR.CONNECTING ROD V2	
		only for EP2231/40 - EP3146/90	
	421945023661	BLK BREW UNIT 8GR.CONNECTING ROD V4	only for EP3546/70
	421941154931	BLK BREW UNIT 8GR.CONNECTING ROD	
		only for EP2131/62 - EP2136/62/72 - EP3146/92	
627	996530003228	BLACK BREW UNIT FRONT PLATE S/SCR.SMART	
	421944091711	BLK BREW UNIT FRONT PLATE S/SCR. V2	
		only for EP2231/40 - EP3146/90	
	421941170181	BLK BREW UNIT FRONT PLATE S/SCR.SMART	
		only for EP2131/62 - EP2136/62/72 - EP3146/92 - EP3546/70	
628	996530007953	SCREW TCB TORX 10 3,5X20 PLAST.SS	
629	421944081491	BREW UNIT VALVE FTR/B	
630	421945001491	SS.CONICAL SPRING 6BAR	
	421941064021	SS.CONICAL SPRING	
		EP2230/14 - EP2231/44 - EP3241/54/74 - EP3246/74/84	
631	996530059489	OR ORM 0060-10 NBR	
632	421944065811	GRY BREW UNIT 8GR.INT.PISTON GEN.V3 ASSY	
	421945008201	GRY BREW UNIT 8GR.INT.PISTON GEN.V4 ASSY	only for china
		only for EP2131/62 - EP2136/62/72 - EP3146/92	

POS	12NC	DESCRIPTION	NOTE
	421945020801	GRY BREW UNIT 8GR.INT.PISTON GEN.V5 ASSY	
		only for EP2231/40 - EP3146/90	
633	996530073426	BLACK BREW UNIT CONVEYOR SLIDE L=56,3	
	421944079341	BLK BREW UNIT CONVEYOR SLIDE L=56,3 V2	
		EP2230/14 - EP2231/44 - EP3241/54/74 - EP3246/74 - EP3546/70	
	421945019401	BLK BREW UNIT CONVEYOR SLIDE L=76,8	
		only for EP2230/12 - EP2231/40/42/43 - EP2235/40 EP3146/72/82/92 - EP3241/50 - EP3243/50/70 EP3246/70/72/73/84 - EP3249/70 - EP3242/60 - EP2131/62 - EP2136/62/72	
	421944093343	BLK/YLW BREW UNIT 8GR 5BAR V3 OMN	
	421945017481	BLK/YLW BREW UNIT 8GR 5BAR OMN/CN (2ND)	only for china
	421944092331	BLK/YLW BREW UNIT 8GR.5BAR FTR/B V3	
		only for EP2230/15 - EP3246/84 - EP3241/74	
	421945025202	BLK/YLW BREW UNIT 8GR 5BAR OMN V3 2ND	
		only for EP2231/40 - EP3146/90	
	421945008142	BLK/YLW BREW UNIT 8GR 5BAR V2 OMN/CN	
		only for EP2131/62 - EP2136/62/72 - EP3146/92	

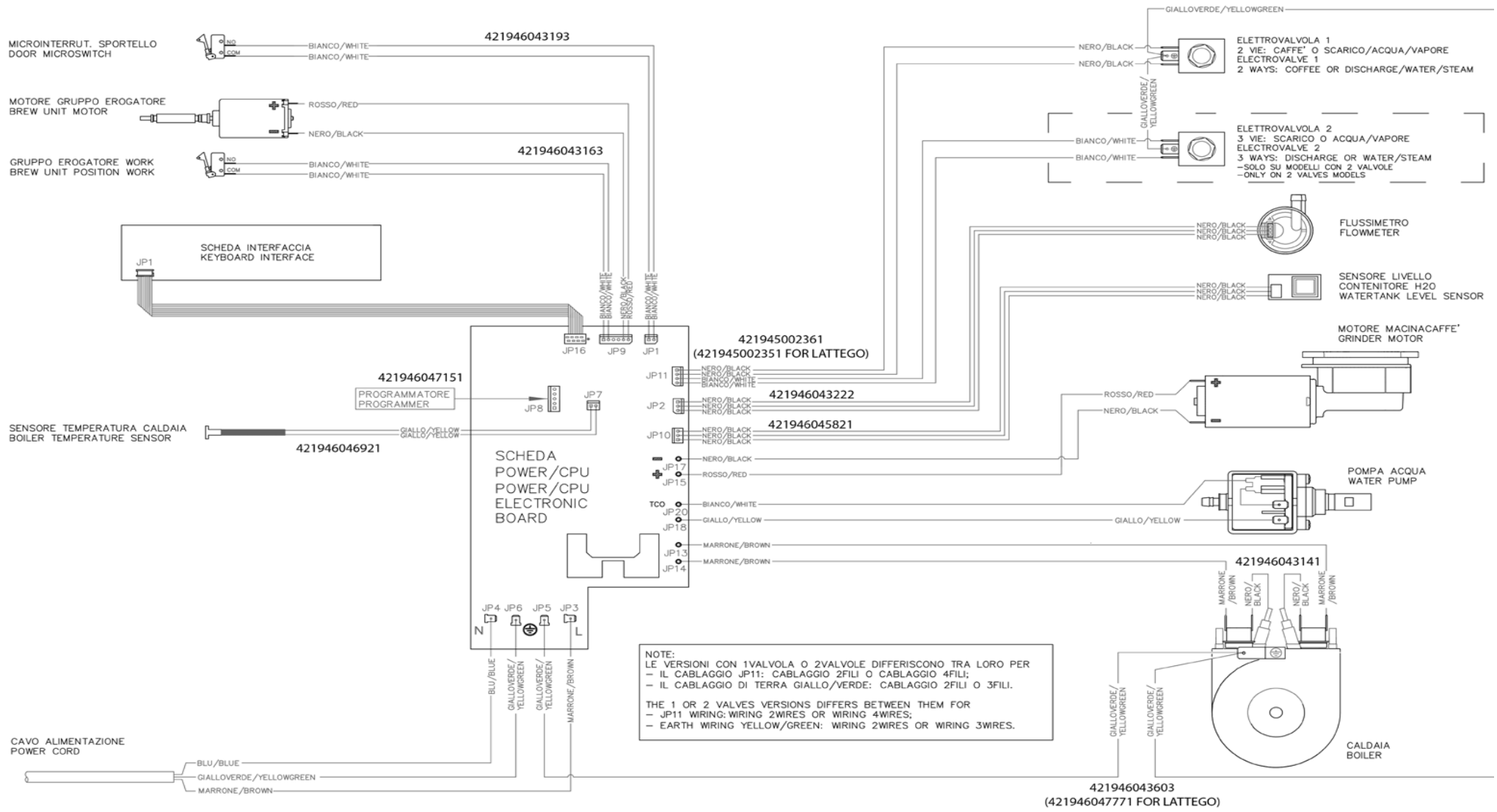

EP2035/40 EP2235/40 EP3242/60 EP2030/10
EP2131/62 EP3146/72/82/92 EP3243/50/70

EP2136/62/72 EP3241/50/54/74 EP3246/84

EP2230/10/12/13/14/15 EP3246/70/72/73/74

EP2231/40/42/43/44 EP3249/70 EP3546/70

Cod. 882870040830 882872440020-0400 882873660400 882870210830
Cod. 882873062710-2210 882873372710-82710-92710-92210 882872050020-400-70020-70400-70830

Cod. 882873162710- 2210-882873172210 882871650020-0400-0830-4820-74520 82872050010- 0300-882872070010

Cod. 882871310010-0300-2240-3470-4820-5240 882871770620-0220-0400-3470-0830-0020-4820-4860

Cod. 882871440020-0620-2410-0400-0830-3470-4860-0530 882872170020-0400 882871784660 882874170010

POS	12NC	DESCRIPTION	NOTE
	421946045821	3POLES CONN. WATER LEV. CAP. OMN UL	
	421946043222	3POLES CONN. FLOWMETER OMN UL	
	421946043141	1 WIRE CABLE BLACK BOILER OMN	
	421946043163	MICRO+MOTOR BREWUN. V2 OMN UL ASSY.	
	421946043193	CONN.MICROSW.DOOR V3 OMN UL ASSY.	
	421946043603	2 WIRES CABLE BOILER/VALVE EARTH OMN V3	
	421945002361	4P.CONN.1ELECTROV. OMN UL ASSY	
	421946047771	3WIRES CABLE BOILER/VAL./VAL. EARTH OMN	
	421945002351	4P.CONN.2ELECTROV. OMN UL ASSY	
	421946046921	TEMPERATURE SENSOR NTC OMN	
	421946047151	WIRING SERPROG OMN PROGRAMMER ASSY.	
	421945001991	3WIRES CABLE BOILER/VAL/VAL EARTH OMN UL	

POS	12NC	DESCRIPTION	NOTE

Index

Click on every chapter of the index to go to the right page on the exploded view

Machines produced in China (Serial TJ...)

Housing Parts	15-16
Front parts (UI)	17
Water circuit	18-19
Grinder	20
Mounting plate	21
Brew unit	22
Wiring diagram	23

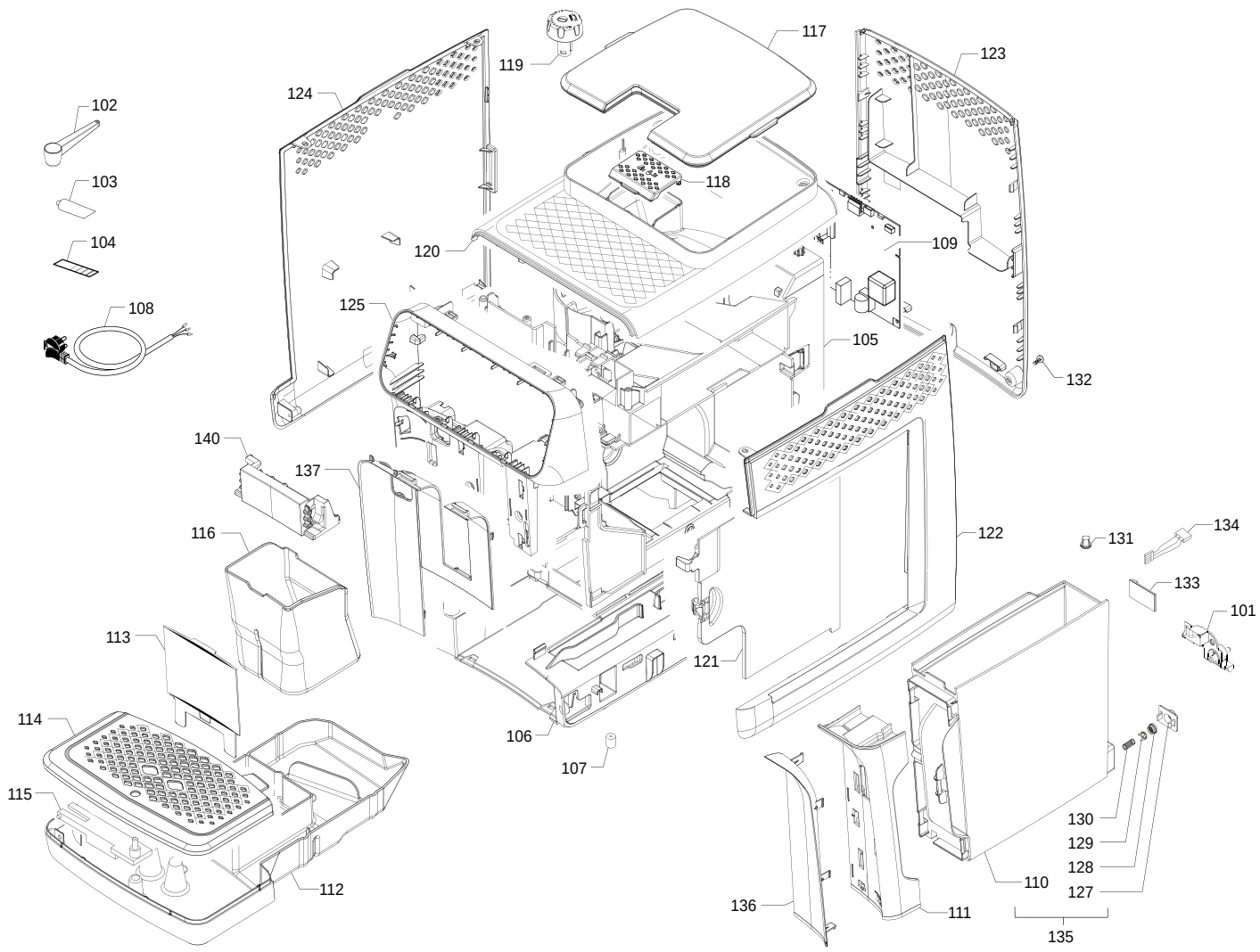

PHILIPS

EP2131/62
EP2136/62
EP2230/12/13/15
EP3246/70/72/74/84

EP3146/72/82/92
EP2136/72
EP2236/40
EP2231/43/44

Cod. 882873062310
Cod. 882873162310
Cod. 882871312440-3670-5440
Cod. 882871770950-2940-4960-84960

882873372310-82310-92310
882873172310
882873440830
882871443670-4960

POS	12NC	DESCRIPTION	NOTE
101	421945040581	WATER TANK CONNECTOR OMN JX	⚠
102	421945040961	COFFEE SPOON OMN JX	
103	421945031791	KLUBERLUB NH1 11-222 TUBE 5GR.V2	
104	421940402711	STICKER FOR WATER HARDNESS TEST	
105	421945043381	CENTRAL STRUCTURE STLR/SR ASSY JX	
	421945043391	CENTRAL STRUCTURE STLR/SR ASSY 120V JX	
		Only for EP2230/15 - EP2231/44 - EP3246/74/84	
106	421945038071	BLK CASING BOTTOM OMP/B JAX	
	421945038741	BLK BASE PLATE OMP/B 120V AS.JX	
		Only for EP2230/15 - EP2231/44 - EP3246/74/84	
107	421324705256	FOOT	⚠
108	421945005041	BLK POWER CABLE 3X0.75 CN L=1000	⚠
	421945017322	BLK POWER CABLE 3X0,75MM BR 220V L=1000	⚠
	421946043171	BLK POWER CABLE 3X0.75 SCH/KOR L=1000	⚠
	421945017331	BLK POWER CABLE 3X1,5MM BR 127V L=1000	⚠
	421945002011	BLACK POWER CABLE TWN L=1000	⚠
	421945003511	BLK POWER CABLE 3X0,75MM SING/UK L=1000	⚠
	421945012171	BLK POWER CABLE 3X0,75MM TH L=1000	⚠
109	421945043241	MAIN+SW APP OMN CN SLW JX	
	421945045451	MAIN+SW APP OMN KR SLW JX	
		Only for EP2230/12/13 - EP2231/43	
	421945047671	MAIN+SW OMN EU BFR FREE MSW JX	only for EP2236/40
	421945044671	MAIN+SW APP OMN 120V JX	only for EP2230/15
	421945046701	MAIN+SW OMN EU MSW JX	
		Only for EP3246/70/72	
	421945044591	MAIN+SW OMN LV SLW JX	
		Only for EP3246/74/84 - EP2231/44	
111	421945038991	BLK WATER TANK HANDLE OMN/H-T JX	
	421945039001	WHIS WATER TANK HANDLE OMN/T-H JX	only for EP3146/92
	421945039011	CASH WAT.TANK HANDLE OMN/H-T JX	
		Only for EP3246/84 - EP3146/72	
	421945039021	BLK/BRUSH.WATER TANK HANDLE OMN/P-B JX	
		Only for EP2230/12/13/15	
112	421945038011	BLK DRIP TRAY OMN/B JX	
113	421945040041	BLK DUMP BOX COVER OMN/H-T JX	
	421945040051	DUMP BOX COV.SIL.SPEC.OMN/T JX	
		Only for EP2136/62 - EP3146/82 - EP2236/40 - EP3246/70/72/74	
	421945040061	MCOP DUMP BOX COV.OMN/T JX	
		Only for EP3146/72/92 - EP3246/84	
	421945040021	BLK/BRUSH.DUMP BOX COVER OMN/B-P JX	

POS	12NC	DESCRIPTION	NOTE
		Only for EP2230/12/13/15	
114	421945023292	BA/SS GRATE FOR DRIP TRAY V3 OMN/B	
	421945038001	BLK GRATE FOR DRIP TRAY OMN/B JX	
		Only for EP2230/12/13/15	
	421945052831	B BA/SS GRATE FOR DRIP TRAY V3 OMN/B JX	
		Only for EP2236/40 - EP2231/43/44 - EP3246/70/72/74/84	
115	421945040601	RED FLOATER OMN/B JX	
116	421945038021	BLK DUMP BOX OMN/B JX	
117	421945038981	BEAN CONT.LID OMN JX	
	421945038971	TR/GRY BEAN COF.CO.LID W/SEAL OMN/B JX	
		Only for EP2230/12/13/15 - EP2236/40 - EP2231/43/44 - EP3246/70/72/74/84	
118	421945040561	NAT/GRY GROUND COF.HOPPER LID OMN/B JX	
119	421945040541	GRINDER SETTING KNOB OMN JX	
120	421945043621	M/BLK UPP.CAS.COVER OMN/SR	
	421945043871	CASH UPP.CAS.COVER OMN/SR JX	
		Only for EP3246/84 - EP3146/72	
	421945043881	WISH UPP.CAS.COVER OMN/SR JX	only for EP3146/92
121	421945038031	LATERAL DOOR OMN/B JX	
122	421945038811	BLK RIGHT PANEL OMN/B JX	
	421945038821	WHT RIGHT PANEL OMN/H-T JX	only for EP3146/92
	421945038831	CASH RIGHT PANEL OMN/B JX	
		Only for EP3246/84 - EP3146/72	
123	421945038851	BLK BACK PANEL OMN/B JX	
	421945038861	WHT BACK PANEL OMN/B JX	only for EP3146/92
	421945038871	CASH BACK PANEL OMN/B JX	
		Only for EP3246/84 - EP3146/72	
124	421945038891	BLK LEFT PANEL OMN/B JX	
	421945038901	WHT LEFT PANEL OMN/B JX	only for EP3146/92
	421945038911	CASH LEFT PANEL OMN/B JX	
		Only for EP3246/84 - EP3146/72	

IMPORTANT REPAIR INSTRUCTIONS: Only use genuine Philips spare parts to replace critical components.
The warranty of your Philips product is void if you do not use genuine Philips spare parts to repair critical components of your appliance.
The critical components are indicated with a warning triangle ⚠ in the service exploded view and/or service manual.

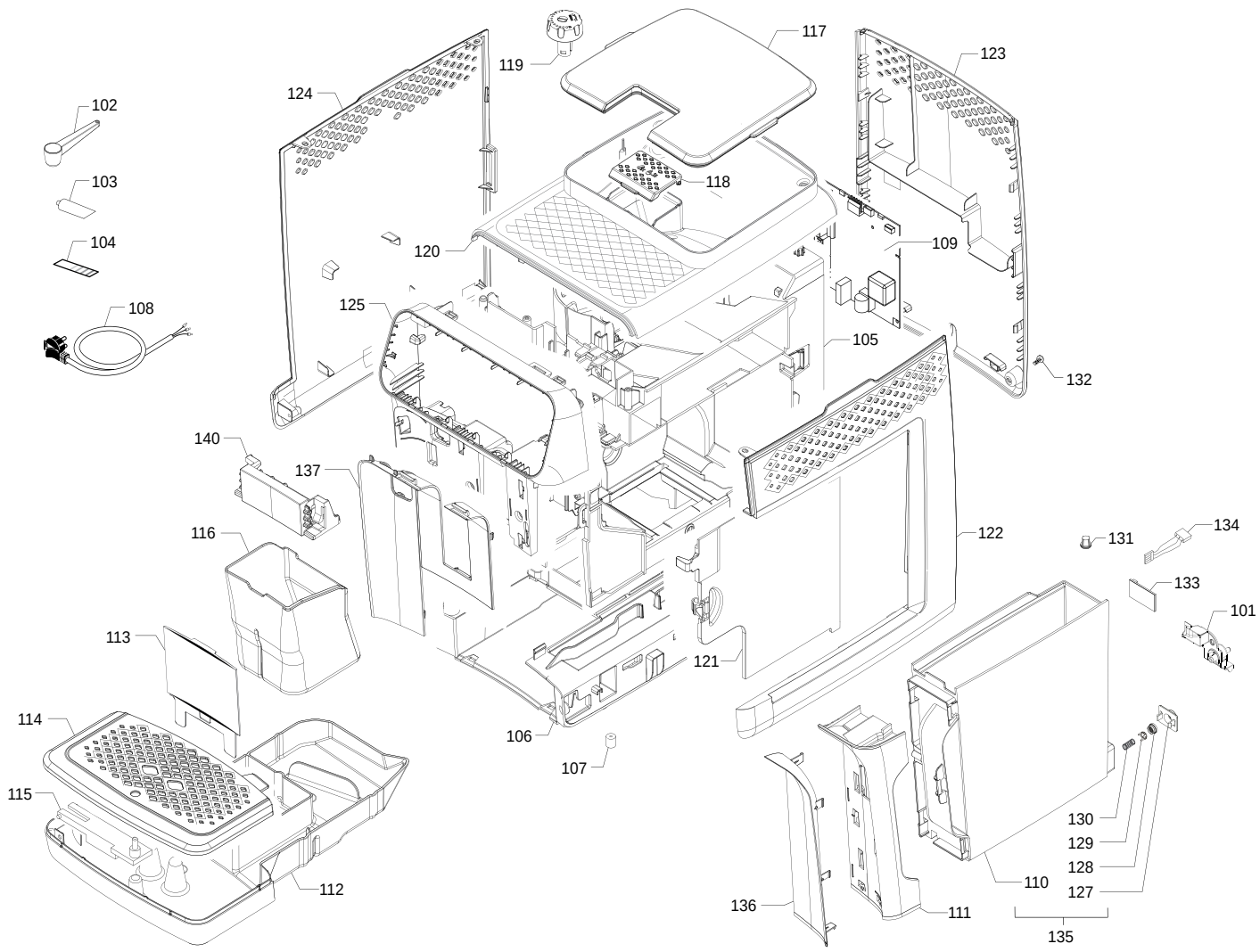

PHILIPS

EP2131/62
EP2136/62
EP2230/12/13/15
EP3246/70/72/74/84

EP3146/72/82/92
EP2136/72
EP2236/40
EP2231/43/44

Cod. 882873062310
Cod. 882873162310
Cod. 882871312440-3670-5440
Cod. 882871770950-2940-4960-84960

882873372310-82310-92310
882873172310
882873440830
882871443670-4960

POS	12NC	DESCRIPTION	NOTE
125	421945038941	BLK FRONT UPPER CASING COVER OMN/H-T JX	
	421945038951	WHT FRONT UPP.CAS.COV.OMN/H-T JX	only for EP3146/92
	421945038961	CASH FRONT UPP.CAS.COV.OMP/H JX	
		Only for EP3246/84 - EP3146/72	
	421945038931	BLK/BRUSH.FRONT UPPER CASING COVER OMN/P JX	
		Only for EP2230/12/13/15	
132	421945042291	SCREW TCBR TORX 10 3,5X12 PLAST.SS JX	⚠
133	421941306721	CPU+SW WATER LEVEL SENSOR V3 ASSY.	⚠
	421945052781	B N.BOARD+SW WAT SENS OMN JX	⚠
		Only for EP2230/15 - EP2231/44 - EP3246/74/84	
134	421945042911	3 P.CONN.WATER LEV.CAP.V2 OMN UL AS. JX	
135	421945038581	WATER TANK OMN/B JX ASSY	
136	421945040161	D/BLK WATER CONT.HAND.COV.OMN/H-T JX	
	421945040171	WATER CONT.HAND.COV.SILV.SPEC.OMN/T JX	
		Only for EP2136/62 - EP3146/82 - EP2236/40 - EP3246/70/72/74	
	421945040181	MCOP WATER CONT.HAND.COV.OMN/T JX	
		Only for EP3146/72/92 - EP3246/84	
137	421945040091	BLK INS.FRONT UPPER CASING COVER OMN/B JX	
	421945040111	MCOP INS.FR.UP.CAS.COV.OMN/T JX	
		Only for EP3146/72/92 - EP3246/84	
	421945040121	INS.FR.UP.CAS.COV.SILVER SPEC OMN/T JX	
		Only for EP2136/62 - EP3146/82 - EP2236/40 - EP3246/70/72/74	
140	421945040771	BRUSH.D/BLK FR.PAN.INSERT OMN/B JX	
		Only for EP2230/12/13/15	

POS	12NC	DESCRIPTION	NOTE

IMPORTANT REPAIR INSTRUCTIONS: Only use genuine Philips spare parts to replace critical components.
The warranty of your Philips product is void if you do not use genuine Philips spare parts to repair critical components of your appliance.
The critical components are indicated with a warning triangle ⚠ in the service exploded view and/or service manual.

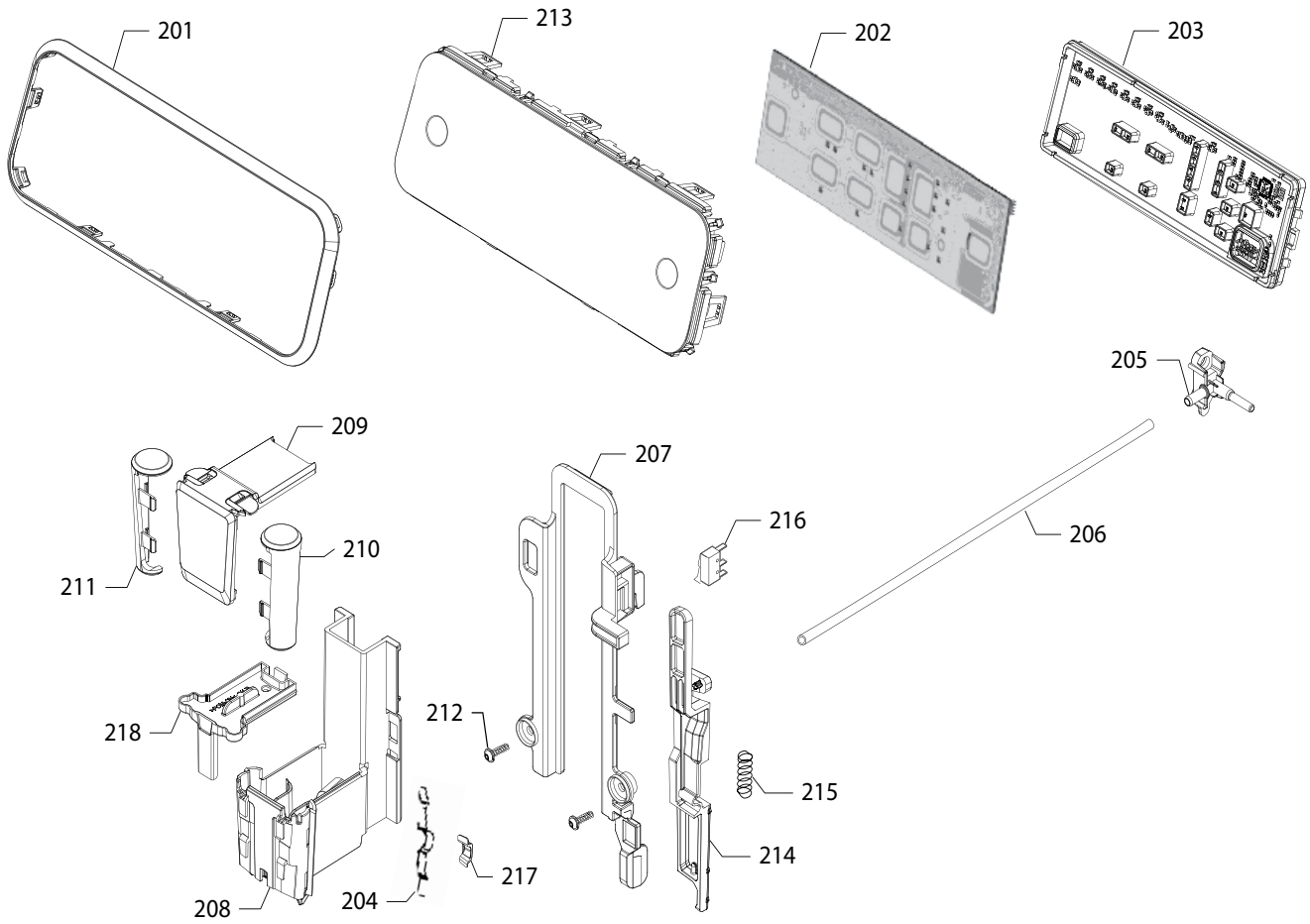

PHILIPS

EP2131/62
EP2136/62
EP2230/12/13/15
EP3246/70/72/74/84

EP3146/72/82/92
EP2136/72
EP2236/40
EP2231/43/44

Cod. 882873062310
Cod. 882873162310
Cod. 882871312440-3670-5440
Cod. 882871770950-2940-4960-84960

882873372310-82310-92310
882873172310
882873440830
882871443670-4960

POS	12NC	DESCRIPTION	NOTE
201	421945039861	CHR.UI FRAME OMN/T JX	
	421945039871	RCOP UI FRAME OMN/T JX	
		Only for EP2136/72 - EP3146/72/92 - EP3246/84	
202	421945043601	UI+SW OMN CN ESLW JX	⚠
	421945046671	UI+SW OMN CN BSLW JX	⚠
		Only for EP3146/72/82/92	
	421945045471	UI+SW APP OMN ESLW KR JX	⚠
		Only for EP2230/12/13 - EP2231/43	
	421945051521	UI+SW APP OMN EU ELG JX	⚠ only for EP2236/40
	421945048181	UI+SW APP ENTRY OMN 3K LV JX	⚠ only for EP2230/15
	421945050591	UI+SW OMN_LV_ESLW JX	⚠
		Only for EP2231/44	
	421945046721	UI+SW APP.OMN EU UI BSW JX	⚠
		Only for EP3246/70/72	
	421945046571	UI+SW OMN_LV_BSLW JX	⚠
		Only for EP3246/74/84	
203	421945039981	WHT REAR COVER UI CWT OMN/B JX	
	421945039991	WHT REAR COVER UI CWT OMN/T JX	
		Only for EP3146/72/82/92 - EP3246/70/72/74/84	
204	421945041891	SPOUT SPRING JX	
205	421945040631	BLK COF.OUTLET CONN OMN CN JX	
	421945040621	BLK BREW UNIT COFFEE OUTLET CONN.OMN/B JX	
		Only for EP2230/12/13/15 - EP2231/43/44 - EP3246/70/72/74/84	
206	421945001461	SILICONE TUBE 4X6.5 L=245 MM	
	421945054721	B SILICONE TUBE 4X6.5 L=245 MM JX	
		Only for EP2230/12/13/15 - EP2236/40 - EP2231/43/44 - EP3246/70/72/74/84	
207	421945039791	COF.DISPENS.SUPP.OMN/B JX	
208	421945039761	BLK COF.DISP.EXT.MOB.PART OMN/B JX	
209	421945039751	BLK UPP.COV.COFF.DISP.S/SCR.OMN/B JX	
	421945050861	BLK UPP.COV.COF.DISP.S/SCR.OMN/WALITA JX	only for EP2230/15
210	421945039651	CHR RIGHT SIDE INS.COF.DISP.OMN/B JX	⚠
	421945039661	RCOP RIGHT SIDE INS.COF.DISP.OMN/B JX	⚠
		Only for EP2136/72 - EP3146/72/92 - EP3246/84	
211	421945039691	CHR LEFT SIDE INS.COF.DISP.OMN/B JX	⚠
	421945039701	RCOP LEFT SIDE INS.COF.DISP.OMN/B JX	⚠
		Only for EP2136/72 - EP3146/72/92 - EP3246/84	

POS	12NC	DESCRIPTION	NOTE
212	421945042091	SCREW TCBR TORX 10 3,5X12 PLAST.ZN-N JX	
213	421945041461	BLK FRONT PANEL UI OMN/T3B S/SCR.CH JX	
	421945041491	BLK FRONT PANEL UI OMN/M3a S/SCR.CH JX	
		Only for EP2131/62 - EP2136/62/72	
	421945041471	BLK FRONT PANEL UI OMN/M3A S/SCR. JX	
		Only for EP2230/12/13 - EP2236/40 - EP2231/43	
	421945041481	BLK FRONT PANEL UI OMN/M3A 120V S/SCR. JX	
		Only for EP2230/15 - EP2231/44	
	421945041441	BLK FRONT PANEL UI OMN/T3B S/SCR. JX	
		Only for EP3246/70/72	
	421945041451	BLK FRONT PANEL UI OMN/T3B 120V S/SCR. JX	
		Only for EP3246/74/84	
214	421945039811	DUMP BOX MISCROSWITCH LEVER OMN JX	
215	421945041861	MICROSWITCH LEVER SPRING OMN JX	
216	421945043001	CONN.MICROSW.DOOR OMN UL ASSY V3 JX	
217	421945040831	WHT COFFEE DISPENSER SLIDER OMN/B JX	
218	421945039831	INTERNAL COVER OMN/B JX	

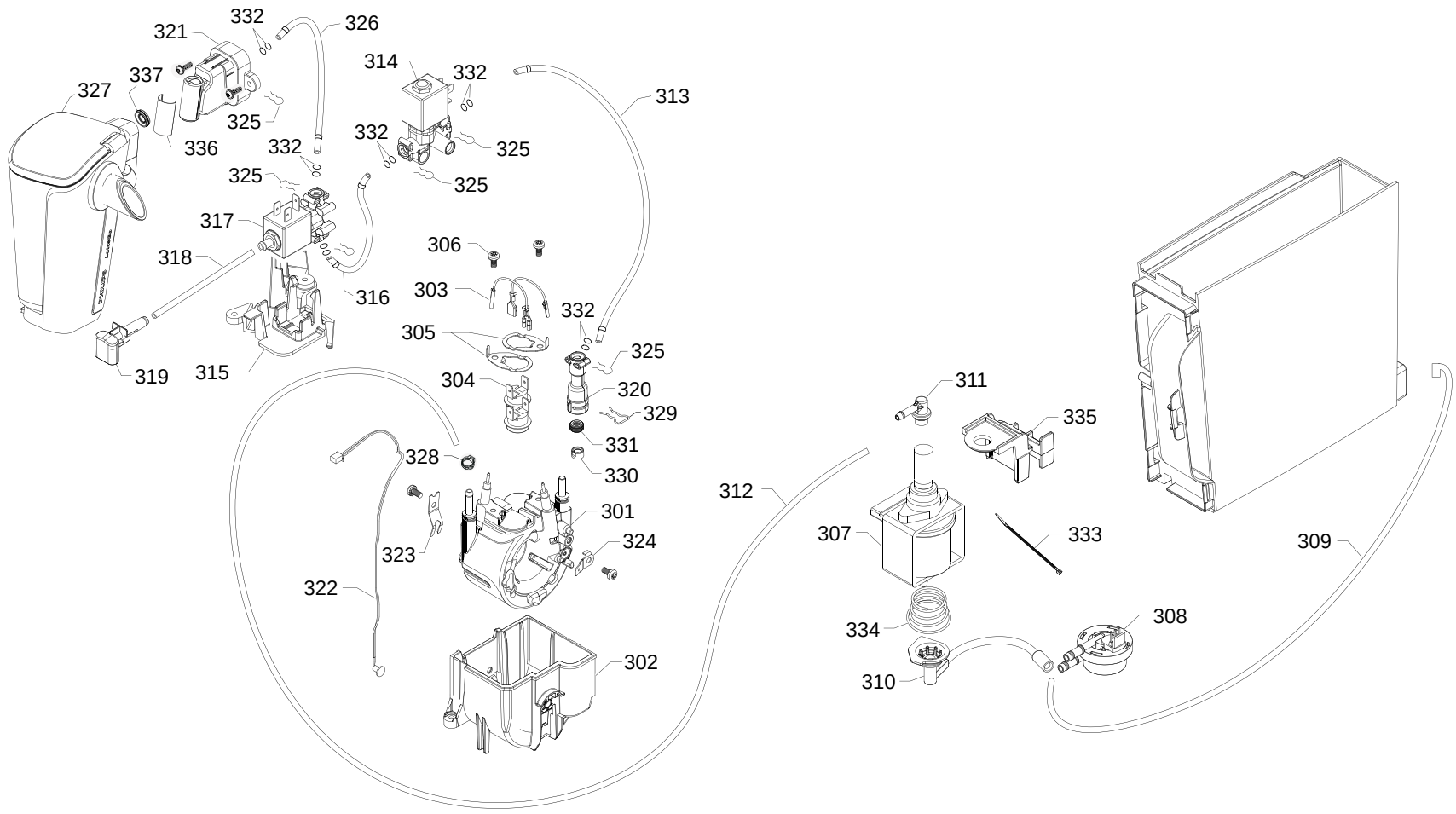

PHILIPS

EP2131/62
EP2136/62
EP2230/12/13/15
EP3246/70/72/74/84

EP3146/72/82/92
EP2136/72
EP2236/40
EP2231/43/44

Cod. 882873062310
Cod. 882873162310
Cod. 882871312440-3670-5440
Cod. 882871770950-2940-4960-84960

882873372310-82310-92310
882873172310
882873440830
882871443670-4960

POS	12NC	DESCRIPTION	NOTE
301	421944082941	THERMOBLOCK OMN ASSY	⚠
	421945003491	THERMOBLOCK 127V OMN ASSY	⚠
		Only for EP2230/15 - EP2231/44 - EP3246/74/84	
302	421944082951	THERMOBLOCK SUPP.OMN ASSY	⚠
	421945052731	B THERMOBLOCK SUPP.OMN JX	⚠
		Only for EP2230/12/13/15 - EP2236/40 - EP2231/43/44 - EP3246/70/72/74/84	
303	421945042971	CABLE 1 WIRE BLK BOILER OMN JX	⚠
	421945042991	CABLE 1 WIRE BLK BOILER OMN UL JX	⚠
		Only for EP2230/12/13/15 - EP2236/40 - EP2231/43/44 - EP3246/74/84	
305	421945041811	FUSE CLAMP JX	⚠
306	421945042111	SCREW TCB TORX 20 M4X8 AUTOFORMING ZN-B JX	⚠
307	421941305991	ULKA PUMP EP5FMGW 230V-50HZ	⚠
	421945052671	B ULKA PUMP EP5/S GW 220V-60HZ JX	⚠
		Only for EP2230/12/13 - EP2231/43	
	421945052681	B ULKA PUMP EP5FMGW 230V-50HZ JX	⚠
		Only for EP2236/40 - EP3246/70/72	
	421945052711	B ULKA PUMP EFP5/S 120V-60HZ JX	⚠
		Only for EP2230/15 - EP2231/44 - EP3246/74/84	
308	421940207701	TURBINE D=1,2 932-9521/B ASSY.	⚠
	421945052651	B TURBINE D=1,2 932-9521/B AS.JX	⚠
		Only for EP2230/12/13/15 - EP2236/40 - EP2231/43/44 - EP3246/70/72/74/84	
309	422224708411	FM INLET HOSE	
310	422224708391	FM OUTLET HOSE	
311	421944090252	BLACK 90°CONNECTOR PUMP OUTLET V2	⚠
312	421945042141	PINK 5X8,9 SILICONE TUBE L=140 MM CN JX	⚠
	421945054021	PINK 5X8,9 SILICONE TUBE L=140 MM JX	⚠
		Only for EP2230/12/13/15 - EP2236/40 - EP2231/43/44 - EP3246/70/72/74/84	
313	421945042121	TEFL.TUB.2X4 L=200MM+2BUSH 7/7 AS.CN JX	
	421945053551	TEFL.TUB.2X4 L=200MM+2BUSH 7/7 AS.JX	
		Only for EP2230/12/13/15 - EP2236/40 - EP2231/43/44 - EP3246/70/72/74/84	
314	421944082931	EV OMN ASSY	⚠
	421945052721	B EV OMN ASSY JX	⚠
		Only for EP2230/12/13 - EP2236/40 - EP2231/43 - EP3246/70/72	
	421945052791	B EV ASSEMBLY-UL OMN JX	⚠
		Only for EP2230/15 - EP2231/44 - EP3246/74/84	
315	421945001451	SUPP.3WAY_VALVE OMN/T	⚠

POS	12NC	DESCRIPTION	NOTE
	421945004751	SUPP.3WAY_VALVE OMN/T	⚠
		Only for EP2230/15 - EP2231/44 - EP3246/74/84	
316	421945042151	TEFLON TUBE 2X4 L=180 MM AS.CN JX	
	421945053561	TEFLON TUBE 2X4 L=180 MM AS.JX	
		Only for EP2230/12/13/15 - EP2236/40 - EP2231/43/44 - EP3246/70/72/74/84	
317	421945024511	PLAST.3W.EV V395VN20PADA02	
	421945052761	B PLAST.3W.EV V395VN20PADA02 JX	
		Only for EP2230/12/13 - EP2236/40 - EP2231/43 - EP3246/70/72	
	421945052801	B PLAST.3W.EV-UL V395VN20PADR2A JX	
		Only for EP2230/15 - EP2231/44 - EP3246/74/84	
318	421945042721	SILICON TUBE 5X8 70SH L=470MM JX	
319	421945040711	DISCHARGE CONNECTOR OMN/T JX	⚠
320	422224777123	TB INLET CONNECTOR	⚠
321	421945040651	BLK HOT WATER DISPENSER OMN/T JX	⚠
	421945040911	SS HOT WATER DISPENSER OMN/T JX	⚠
		Only for EP3146/72/82/92 - EP3246/70/72/74/84	
322	421946046921	TEMPERATURE SENSOR NTC OMN	
	421945052891	B TEMPERATURE SENSOR NTC OMN JX	
		Only for EP2230/12/13/15 - EP2236/40 - EP2231/43/44 - EP3246/70/72/74/84	
323	422224002171	NTC CLAMP	
324	421945041821	EARTH TERMINAL JX	
325	421945041801	SS FORK FOR TUBE D.4 JX	
326	421945042691	TEFLON TUBE 2X4 L=210 MM AS.CN JX	
	421945053571	TEFLON TUBE 2X4 L=210 MM AS.JX	
		Only for EP2230/12/13/15 - EP2236/40 - EP2231/43/44 - EP3246/70/72/74/84	
327	421945021811	TR/BLK GEN.CARAFE SW ASSY/B CN	
	421945044221	TR/BLK GEN.CARAFE SW V2 CN ASSY	
		Only for EP3146/72/82/92	
	421945016211	TR/BLK GEN.CARAFE SW ASSY/B	
		Only for EP2230/12/13/15 - EP2236/40 - EP2231/43/44	
	421945044211	TR/BLK GEN.CARAFE SW V2 ASSY	
		Only for EP3246/70/72/74/84	

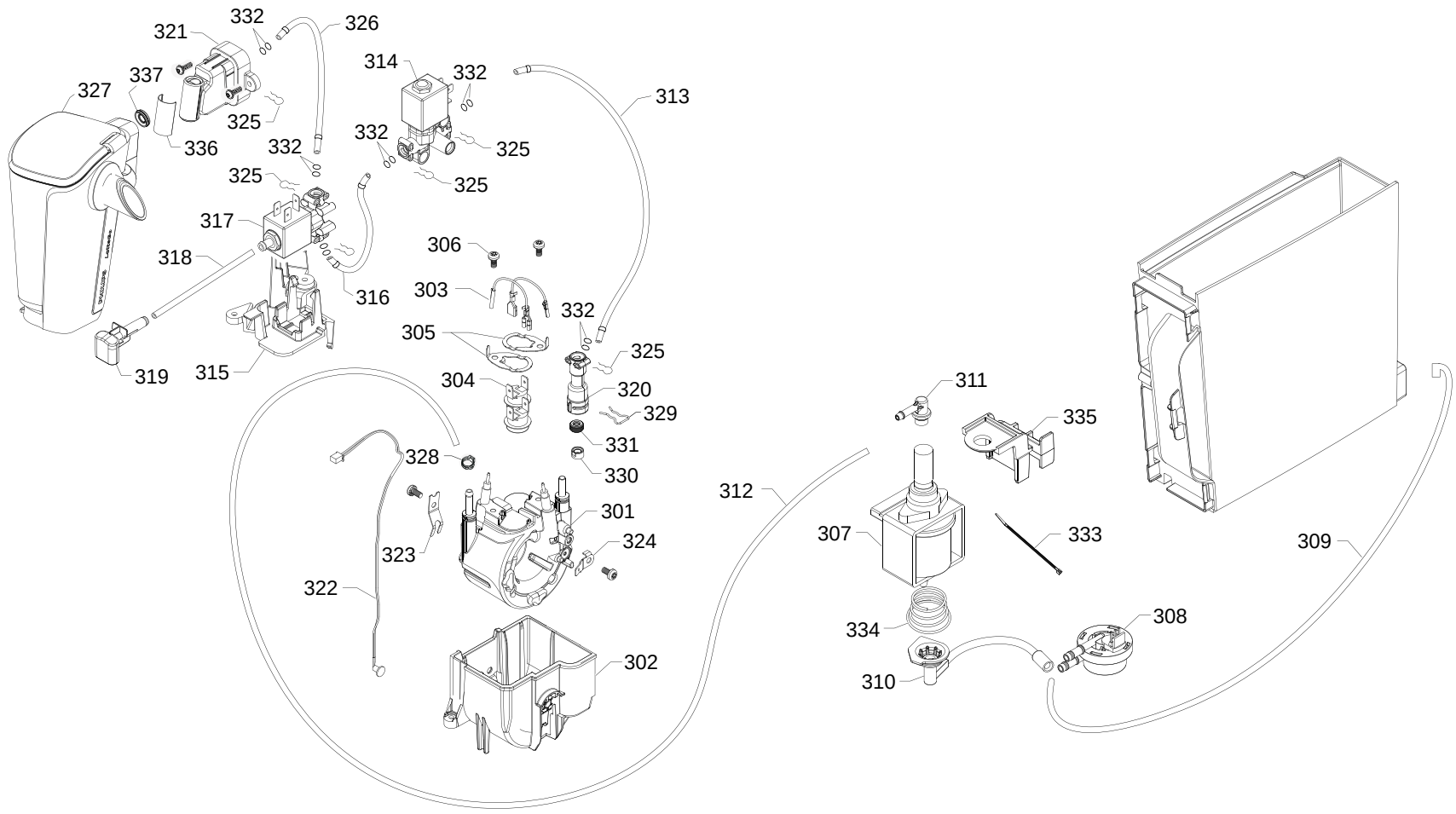

PHILIPS

EP2131/62
EP2136/62
EP2230/12/13/15
EP3246/70/72/74/84

EP3146/72/82/92
EP2136/72
EP2236/40
EP2231/43/44

Cod. 882873062310
Cod. 882873162310
Cod. 882871312440-3670-5440
Cod. 882871770950-2940-4960-84960

882873372310-82310-92310
882873172310
882873440830
882871443670-4960

POS	12NC	DESCRIPTION	NOTE
328	421940221091	OETIKER CLAMP D=9,5 16700004	
329	421945041831	FORK FOR D=8MM JX	
330	422224777092	TB SEAL SPACER	
331	422224708381	THERMOBLOCK SEAL	
332	421945042101	OR 2015 IN SILICONE PTFE/FDA JX	
333	421945042311	SELF LOCK STRIP W=2.6 L=200 JX	
334	421945041841	PUMP SPRING JX	
335	421945041591	PUMP RUBBER SUPPORT OMN JX	
336	421945012081	BLK STEAM SPOUT-CN SMRE/M	
	421944083581	BLK STEAM SPOUT SMRE/M	
		Only for EP2230/12/13/15 - EP2236/40 - EP2231/43	
	421945044821	BLK STEAM SPOUT BODY OMN ASSY JX	
		Only for EP2231/44	
	421945046581	BLK/SS STEAM SPOUT BODY OMN ASSY JX	
		Only for EP3246/70/72/74/84	
337	421944083451	BLK CARAFE CONN.LG	

POS	12NC	DESCRIPTION	NOTE

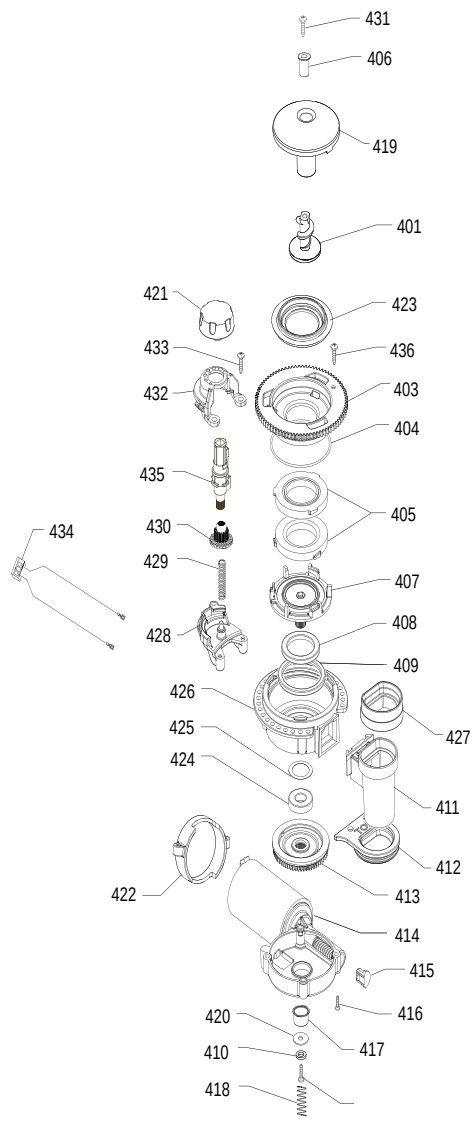

PHILIPS

EP2131/62
EP2136/62
EP2230/12/13/15
EP3246/70/72/74/84

EP3146/72/82/92
EP2136/72
EP2236/40
EP2231/43/44

Cod. 882873062310
Cod. 882873162310
Cod. 882871312440-3670-5440
Cod. 882871770950-2940-4960-84960

882873372310-82310-92310
882873172310
882873440830
882871443670-4960

POS	12NC	DESCRIPTION	NOTE
401	421944032693	GRIVORY INCREASE SCREW GRINDER V3	
402	996530012928	SCREW TCB TORX 20 M4X30 ZN-B	
403	421941094152	BLK COF.GRINDER UPPER GRINDER SUPPORT V2	
404	996530013577	NBR FDA OR METRIC 0530-15	
405	996530016342	BAKED CLAY GRINDER 48X28	
406	421945041871	BRASS BUSH BEAN CONT.FINGER PROTEC.FTR/B JX	
	421945000721	BLK.BUSH BEAN CONT.FINGER PROTEC	
		Only for EP2230/12/13/15 - EP2236/40 - EP2231/43/44 - EP3246/70/72/74/84	
407	996530017952	LOWER GRINDER SUPPORT COFFEEGRINDER	
408	996530011183	AXIAL BEARING EKKO 342.35252	
409	996530013597	FELT RING 45,4X39,4X4	
410	996530012341	GALV.WASHER UNI 8842 A4	⚠
411	421941230122	BLK GROUND COFF.OUTLET CONV. V2 ASSY.	⚠
412	421945043611	GRY GROUND COF.CONT.LOW.SEAL /SR STLR JX	⚠
413	421945006091	GRY GEAR SX Z=38 FOR GRINDER MOTION	
414	421944049151	MOTOR COFFEEGRINDER V3.2 230V ASSY.	
	421944084071	MOTOR COFFEEGRINDER V3.2 WZN 120V ASSY	
		Only for EP2230/15 - EP2231/44 - EP3246/74/84	
415	996530018139	CAP FOR WORM SCREW MC/V3 CENTRING	
416	421945042281	SCREW TCB TORX 3,5X30 PLAST.ZN-B JX	
417	421941154362	INSULATOR BUSH V2 FOR GRINDER MOTOR	
418	421945041881	STEEL COF.GRINDER SUPPORT SPRING P124 JX	
419	421945040751	BLK GRINDER FINGER PROTECT.OMN JX	
420	996530012375	GALVAN.FLAT WASH.DI=4,3 DE=14 SP=1,5	
422	421945043201	BLK COFFEEGRINDER MOTOR SUPP.OMN/SR	
423	421945041631	COFFEE GRINDER SEAL P119 GRY 7035 JX	
424	996530011182	RADIAL BEARING 61900.2RS1	
425	996530012374	CRINKLE WASHER 21,8X15,8X0,2	
426	421941082802	BLK UPPER BODY WITH COFFEE GROUND OUT.V2	
427	421945041581	BLK GROUND COF.CONT.UPPER SEAL SMART1 JX	
428	996530001314	LOWER GEAR SUPPORT COFFEEGRINDER P124	
429	996530001308	GRINDER REGULATION SPRING P124	
430	996530001907	COFFEE GRINDING ADJUSTMENT GEAR P0049	
431	421940212391	SCREW TCB TORX 3,5X30 PLAST.ZN-B	
432	996530001296	UPPER GEAR SUPPORT COFFEEGRINDER P124	
433	996530013165	SCREW TCB TORX 10 3,5X16 PLAST.ZN-B	
434	421945043011	2POLES CONN.MICROSW.DOOR OMN UL ASSY JX	
	421945043001	CONN.MICROSW.DOOR OMN UL ASSY V3 JX	
		Only for EP2230/12/15 - EP2236/40 - EP2231/43/44 - EP3246/70/74/84	
435	421944052341	BLW BEAN COFFEE GRINDER INSERT V2 SMR	
436	421940213291	SCREW TCB TORX 10 3X8 PLAST.ZN-B	
437	421944092371	GEN.MOTOR COF.GRINDER OMN 230V ASSY	

POS	12NC	DESCRIPTION	NOTE
	421944092381	GEN.MOTOR COF.GRINDER OMN 120V ASSY	
		Only for EP2231/44 - EP3246/74	

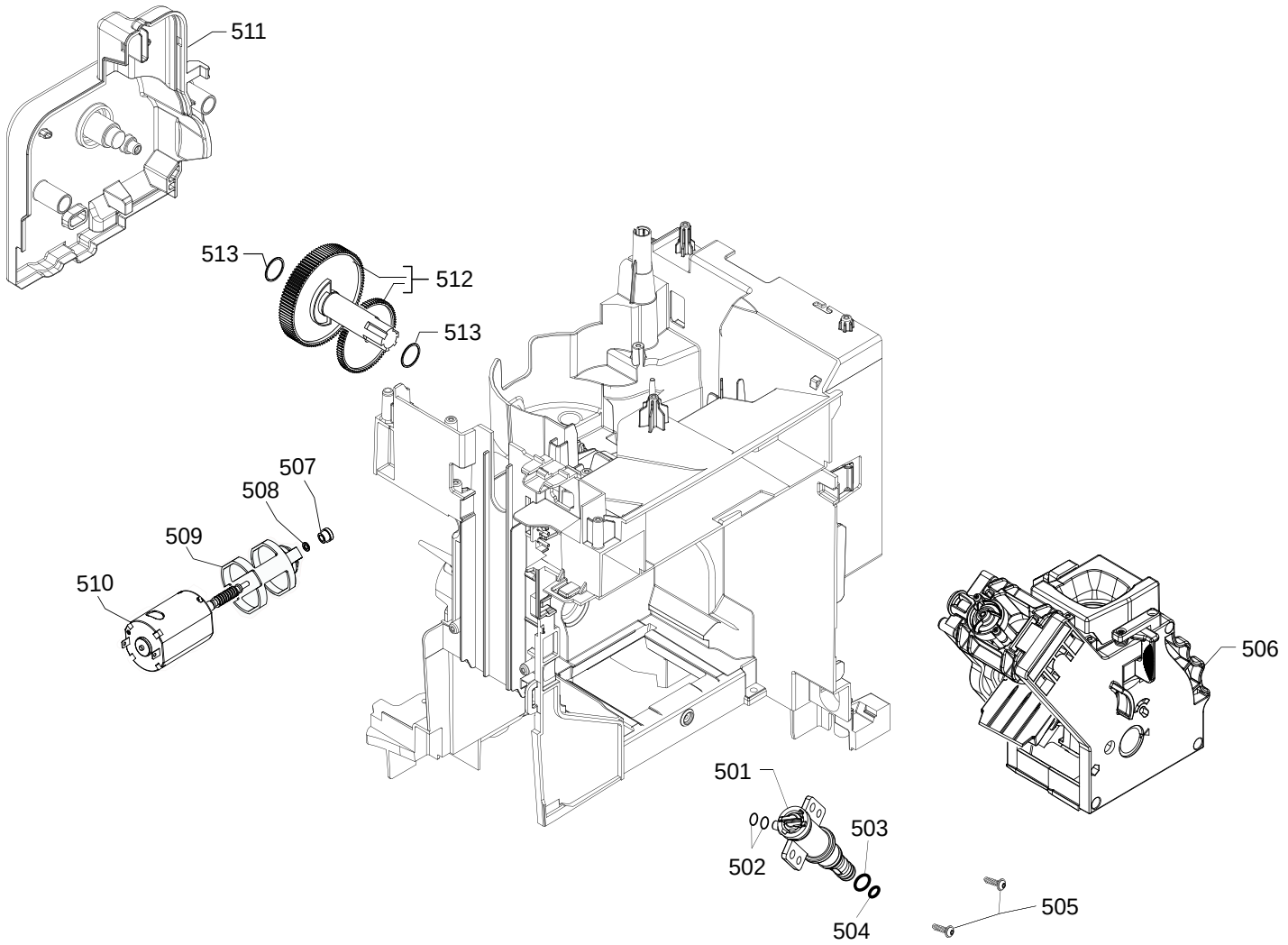

PHILIPS

EP2131/62
EP2136/62
EP2230/12/13/15
EP3246/70/72/74/84

EP3146/72/82/92
EP2136/72
EP2236/40
EP2231/43/44

Cod. 882873062310
Cod. 882873162310
Cod. 882871312440-3670-5440
Cod. 882871770950-2940-4960-84960

882873372310-82310-92310
882873172310
882873440830
882871443670-4960

POS	12NC	DESCRIPTION	NOTE
501	421945045521	PIN FOR BOILER OMN ASSY V3	
502	996530013564	OR 2015 IN SILICONE PTFE/FDA	
503	421945039071	OR ORM 0090-20 RED MG8037R70P	
504	996530059419	OR ORM 0050-20 IN SILICONE	
505	421945042091	SCREW TCBR TORX 10 3,5X12 PLAST.ZN-N JX	
506	421945008142	BLK/YLW BREW UNIT 8GR 5BAR V2 OMN/CN	
	421944093343	BLK/YLW BREW UNIT 8GR 5BAR V3 OMN	
		Only for EP2230/12/13/15 - EP2236/40 - EP2231/43/44 - EP3246/70/72/74/84	
507	996530049898	SINTERED BUSH FOR MOTOR	
508	996530017424	WASHER BAKELIZZATE D=5,5	⚠
509	996530049896	ANTIVIBRATION FOR MOTOR	⚠
510	996530002796	MOTOR FOR RATIOMOTOR P124 ASSY.	⚠
	421945013971	MOTOR FOR RATIOMOTOR P124 ASSY TWN	⚠
		Only for EP2230/15 - EP2231/44 - EP3246/74/84	
511	421945038051	BREW UNIT MOTOR COVER OMN/B JX	
	421945038791	BREW UNIT MOTOR COVER UL OMN/B JX	
		Only for EP2230/15 - EP2231/44 - EP3246/74/84	
512	996530009913	SPARES KIT GEARS FOR RATIOMOTOR V2	
513	421945041521	MYLAR WASHER FOR RATIOMOTOR JX	

POS	12NC	DESCRIPTION	NOTE

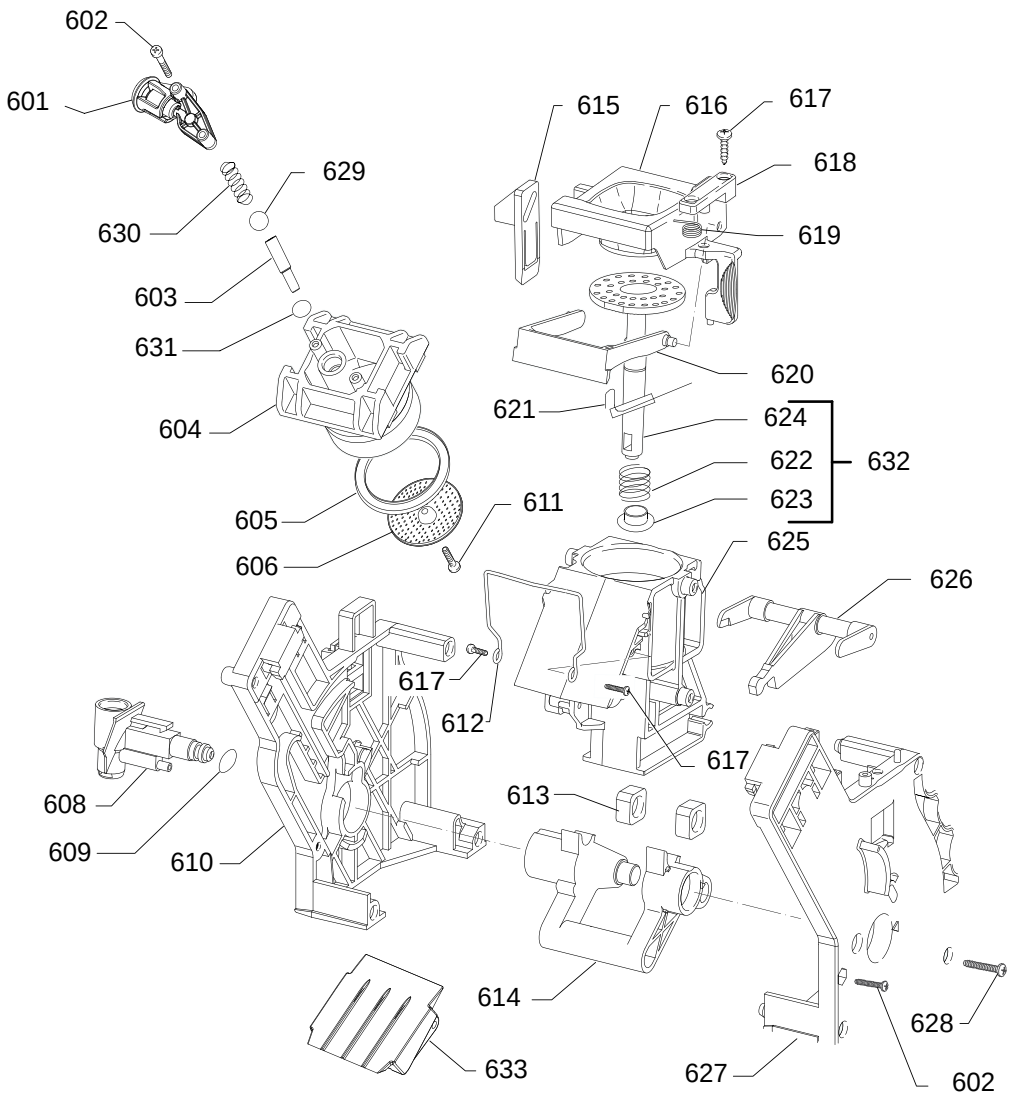

PHILIPS

EP2131/62
EP2136/62
EP2230/12/13/15
EP3246/70/72/74/84

EP3146/72/82/92
EP2136/72
EP2236/40
EP2231/43/44

Cod. 882873062310
Cod. 882873162310
Cod. 882871312440-3670-5440
Cod. 882871770950-2940-4960-84960

882873372310-82310-92310
882873172310
882873440830
882871443670-4960

POS	12NC	DESCRIPTION	NOTE
601	421945008181	BLK BREW UNIT COF.OUT.SLEEVE V3 SMR ASSY	
	421945026582	BLK BREW UNIT COF.OUT.SLEEVE V3 OMN AS	
		Only for EP2230/12/13/15 - EP2236/40 - EP2231/43/44 - EP3246/70/72/74/84	
602	996530007838	SCREW TCB TORX 10 3X25 PLAST.SS	
603	421945003871	BLK BREW UN.COUNTER PISTON TUBE V3 S005	
	421944079291	BLK BREW UN.COUNTER PISTON TUBE V2 S0053	
		Only for EP2230/12/13/15 - EP2236/40 - EP2231/43/44 - EP3246/70/72/74/84	
604	421945003891	BLK BREW UNIT 8GR.COUNTER PISTON V3 P124	
	421945046411	BLK BREW UNIT 8GR.COUNTER PISTON V6 P124	
		Only for EP2230/12/13/15 - EP2236/40 - EP2231/43/44 - EP3246/70/72/74/84	
605	996530059406	OR ORM 0320-40 IN SILICONE PTFE/FDA	
606	421945025332	PERCOLATOR DE=35,8 V2	
608	421944093332	BREW UN.WATER INLET SLEEVE V5	
	421945002572	BREW NEU. UN.WATER INLET SLEEVE V5	
		Only for EP2230/12/13/15 - EP2236/40 - EP2231/43/44 - EP3246/70/72/74/84	
609	421940207151	OR 2025 NBR FDA	
610	421941065071	BLK BREW UNIT REAR PLATE SMART	
611	996530007951	SCREW TSP TORX 10 3X10 PLAST.SS	
612	421945044171	SS BREW UNIT SPRING H=49 PK V2	
613	996530050539	BLACK DRILLED BLOCK BREW UNIT	
614	421944079201	YLW BREW UNIT ELBOW SHAFT V2 M5000	
615	421944046932	YLW BREW UNIT COUPLING PLATE V3 SMART	
616	421944079552	BLK BREW UNIT V4 SMART1 HOPPER DOSER	
	421945040431	BLK BREW UNIT V5 SMART1 HOPPER DOSER	
		Only for EP2230/12/13/15 - EP2236/40 - EP2231/43/44 - EP3246/70/72/74/84	
617	996530013148	SCREW TCBR TORX 10 3,5X14 PLAST.SS	
618	421941065051	BLK BREWUNIT HOPPER BLOCKING PLATE SMART	
619	996530050838	SPRING HOPPER SMART BREW UNIT	
620	421945040461	BLK BREW UNIT SCRAPER V4 M5000	
	421944091771	BLK BREW UNIT SCRAPER M5000 V2	
		Only for EP2230/12/13/15 - EP2236/40 - EP2231/43/44 - EP3246/70/72/74/84	
621	996530050455	SPRING FOR UNIT SCRAPER	
622	996530050627	SS.8GR.BREW UNIT PISTON SPRING	
623	996530050618	WHITE 8GR.-12GR.BREW UNIT PISTON BUSH	
624	421945003941	GRY BREW UNIT INTEGR.PISTON 8GR.V5 ASSY	
	421944079491	GRY BREW UNIT INTEGR.PISTON 8GR.V4 ASSY	
		Only for EP2230/12/13/15 - EP2236/40 - EP2231/43/44 - EP3246/70/72/74/84	

POS	12NC	DESCRIPTION	NOTE
625	421945003921	BLK COF.CONTAIN.BREW UNIT V5 M5000 ASSY	
	421945046391	BLK COF.CONTAIN.BREW UNIT V10 ASSY	
		Only for EP2230/12/13/15 - EP2236/40 - EP2231/43/44 - EP3246/70/72/74/84	
626	421941154931	BLK BREW UNIT 8GR.CONNECTING ROD	
	421945023661	BLK BREW UNIT 8GR.CONNECTING ROD V4	
		Only for EP2230/12/13/15 - EP2236/40 - EP2231/43/44 - EP3246/70/72/74/84	
627	421941170181	BLK BREW UNIT FRONT PLATE S/SCR.SMART	
628	996530007953	SCREW TCB TORX 10 3,5X20 PLAST.SS	
629	421944081491	BREW UNIT VALVE FTR/B	
630	421945001491	SS.CONICAL SPRING 6BAR	
631	996530059489	OR ORM 0060-10 NBR	
632	421945008201	GRY BREW UNIT 8GR.INT.PISTON GEN.V4 ASSY	
	421944065811	GRY BREW UNIT 8GR.INT.PISTON GEN.V3 ASSY	
		Only for EP2230/12/13/15 - EP2236/40 - EP2231/43/44 - EP3246/70/72/74/84	
633	421945019401	BLK BREW UNIT CONVEYOR SLIDE L=56,3	
	421944079341	BLK BREW UNIT CONVEYOR SLIDE L=56,3 V2	
		Only for EP2230/12/13/15 - EP2236/40 - EP2231/43/44 - EP3246/70/72/74/84	
634	421945008142	BLK/YLW BREW UNIT 8GR 5BAR V2 OMN/CN	
	421944093343	BLK/YLW BREW UNIT 8GR 5BAR V3 OMN	
		Only for EP2230/12/13/15 - EP2236/40 - EP2231/43/44 - EP3246/70/72/74/84	

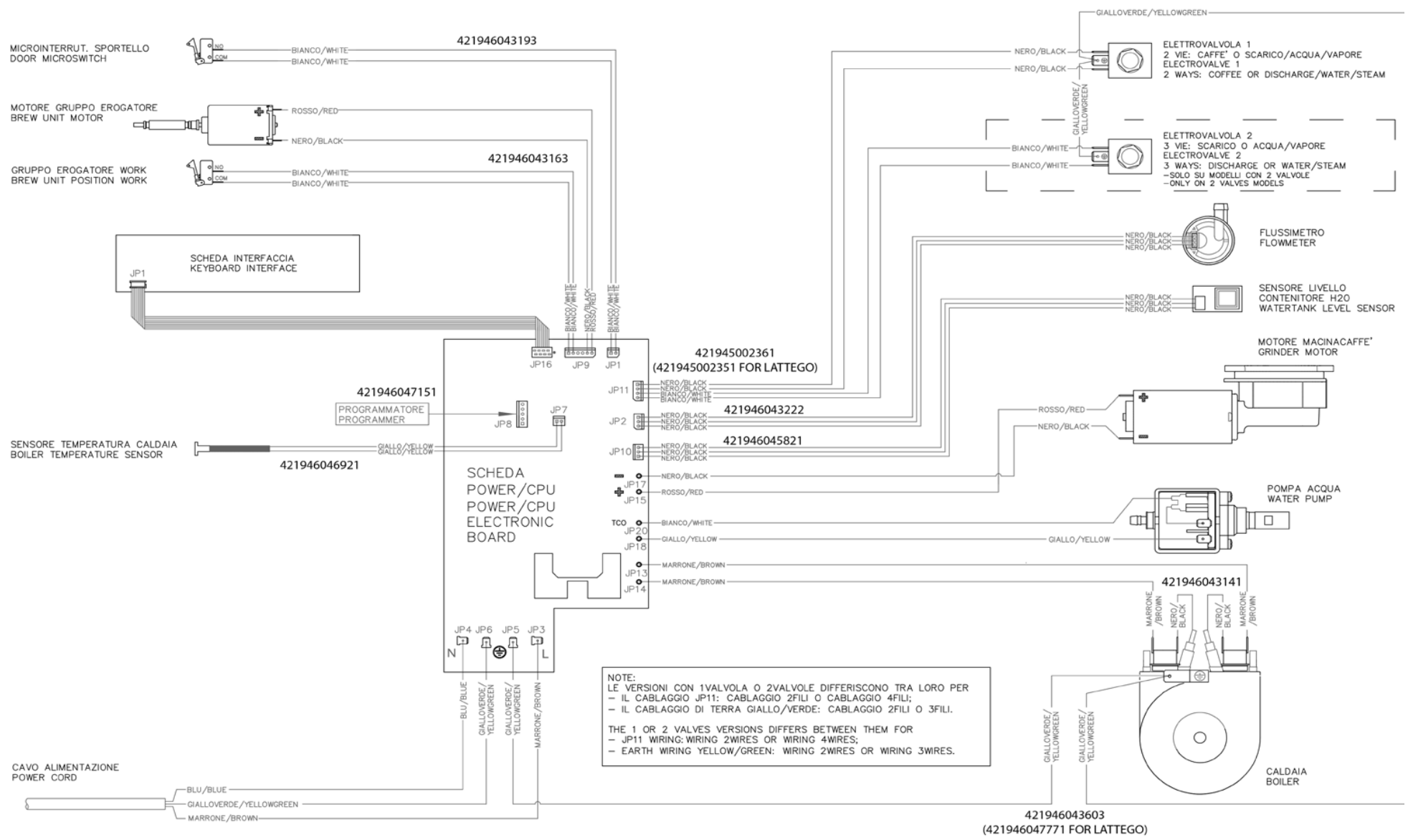

PHILIPS

EP2131/62	EP3146/72/82/92	Cod. 882873062310
EP2136/62	EP2136/72	Cod. 882873162310
EP2230/12/13/15	EP2236/40	Cod. 882871312440-3670-5440
EP3246/70/72/74/84	EP2231/43/44	Cod. 882871770950-2940-4960-84960

882873372310-82310-92310
882873172310
882873440830
882871443670-4960

POS	12NC	DESCRIPTION	NOTE
	421946045821	3POLES CONN. WATER LEV. CAP. OMN UL	
	421946043222	3POLES CONN. FLOWMETER OMN UL	
	421946043141	1 WIRE CABLE BLACK BOILER OMN	
	421946043163	MICRO+MOTOR BREWUN. V2 OMN UL ASSY.	
	421946043193	CONN.MICROSW.DOOR V3 OMN UL ASSY.	
	421946043603	2 WIRES CABLE BOILER/VALVE EARTH OMN V3	
	421945002361	4P.CONN.1ELECTROV. OMN UL ASSY	
	421946047771	3WIRES CABLE BOILER/VAL./VAL. EARTH OMN	
	421945002351	4P.CONN.2ELECTROV. OMN UL ASSY	
	421946046921	TEMPERATURE SENSOR NTC OMN	
	421946047151	WIRING SERPROG OMN PROGRAMMER ASSY.	
	421945001991	3WIRES CABLE BOILER/VAL/VAL EARTH OMN UL	

POS	12NC	DESCRIPTION	NOTE

www.philips.com